• Humidity Control • Heat Recovery

Solutions

Carolina Heat Pipe Inc

INDEX

I. Humidity Control and Indoor Air Quality

II. CHP History & Approach to the Market

III. Products Available
- A. ST Mach I - Thermosyphon Run-Around Heat Pipe (TRAHP™)
- B. Controllable Hot Gas Reheat
- C. Heat Recovery Heat Pipe Solutions
- D. Customized Outside Air Supply Package Unit
- E. Subcool Reheat of Refrigerant for Improved Dehumidification

IV. Specification Guidance, Control Strategy and Design Procedures

V. Maintenance & Control Systems

VI. Energy Savings Calculation

VII. Reference: ANSI/ASHRAE Standard 62-2001 & Technical Articles

109 Wappoo Creek Drive, Suite 4B Charleston, SC 29412 ph: 843.795.9965 fax: 843.795.9757
www.carolinaheatpipe.com

Carolina Heat Pipe Inc.

"The Humidity Control Specialists"

I. Humidity Control & Indoor Air Quality

Page

Humidity Control and Indoor Air Quality	I-1
Background	I-3
Schematic of a Heat Pipe Applied to an Air Conditioning System	I-4
Comfort Chart	I-5
Energy Savings vs. Temperature	I-6
Harmful Effects of High Relative Humidity	I-7
Relative Humidity Guidelines & Defining Terms	I-8
Humidity Control & Indoor Air Quality Issues	I-10
Why ASHRAE promotes maintaining 30-60% Relative Humidity	I-11
Modern Building Techniques and Air Conditioning Loads	I-12
Defining and Controlling Moisture Load	I-13
Air Conditioning Design Considerations	I-14

109 Wappoo Creek Drive, Suite 4B Charleston, SC 29412 ph: 843.795.9965 fax: 843.795.9757
www.carolinaheatpipe.com

HUMIDITY CONTROL & INDOOR AIR QUALITY

A Healthy Environment

In the case of "Health" we refer the reader to Chapter 20 of the ASHRAE Handbook " HVAC Systems & Equipment". The chart from Chapter 20 that describes the effect of room humidity on selected human health parameters has been reproduced in this section. From this chart we note that dust mites, fungi, bacteria, and viruses are least likely to be present at a 50 % relative humidity.

The ASHRAE Ventilation Standard 62-2001 acknowledges that the supply duct relative humidity should be limited to 70 %. Normally, air leaving the cooling coil is at 95 to 98 % relative humidity. This is an excellent breeding place for molds. For health reasons the humidity in the supply ducts should be limited to 70 % and the building's relative humidity should be designed for 50 %.

The importance of controlling humidity is a major indoor health consideration.

Health Costs

The threat of large money losses from litigation due to an unhealthy indoor environment is a major concern to both building owners and the companies that lease buildings today.

Studies have shown that while there are many factors that can cause a sick or unhealthy building, when relative humidity in the air is maintained in the range of 30-60%, health related problems are minimized.

Public knowledge is such that design engineers face serious liability for lawsuits from their clients and the public if adequate plans for humidity control are not recommended for buildings or installation of equipment.

Energy and Maintenance Cost

The challenge to building owners and operators today is to control humidity effectively with available technology. The technology must get the job done over the life of the building without consuming external energy and requiring a minimum of maintenance labor and operating costs.

Since 1993 Carolina Heat Pipe Inc. has concentrated on providing the most advanced humidity control solutions available to its customers. Some of these products are detailed in the product section of our catalog.

To Improve Comfort

In the case of "Comfort", at 50 % humidity the building will feel more comfortably cooler and the room temperature can be set at a higher temperature. See our Comfort Chart in this section on page I-5

To Save Energy

In the case of "Energy Consumption" when the building occupants are comfortable at higher temperatures less energy is consumed by the air conditioning system.

To Reduce Building Maintenance

When the building is maintained in the relative humidity range of 40 to 60 %, the finished building and its furnishings do not become moldy because the mold or mildew does not form on and in the building itself as well as its furnishings.

BACKGROUND

During the past several years Carolina Heat Pipe Inc. has provided a series of Humidity Control Solutions and Energy Recovery Solutions for use in Heating, Refrigeration and Air Conditioning Systems. These solutions have been successfully applied to several high profile installations. In these cases the building owner was interested in providing a simple, reliable, energy-efficient long-term solution to a requirement for a healthy indoor air environment.

Many of these solutions have utilized Heat Pipe Heat Exchangers to transfer heat from the entering air or return air of an air conditioning unit to the supply air leaving an air conditioning system.

While there are many different forms of heat pipe heat exchangers, most have been developed to optimally meet a particular application. All, including those utilized by Carolina Heat Pipe Inc., employ the same basic principle. In its simplest form a heat pipe is a sealed tube which has been evacuated, charged with a precise amount of refrigerant and sealed.
The actual function of a heat pipe is described in the figure below.

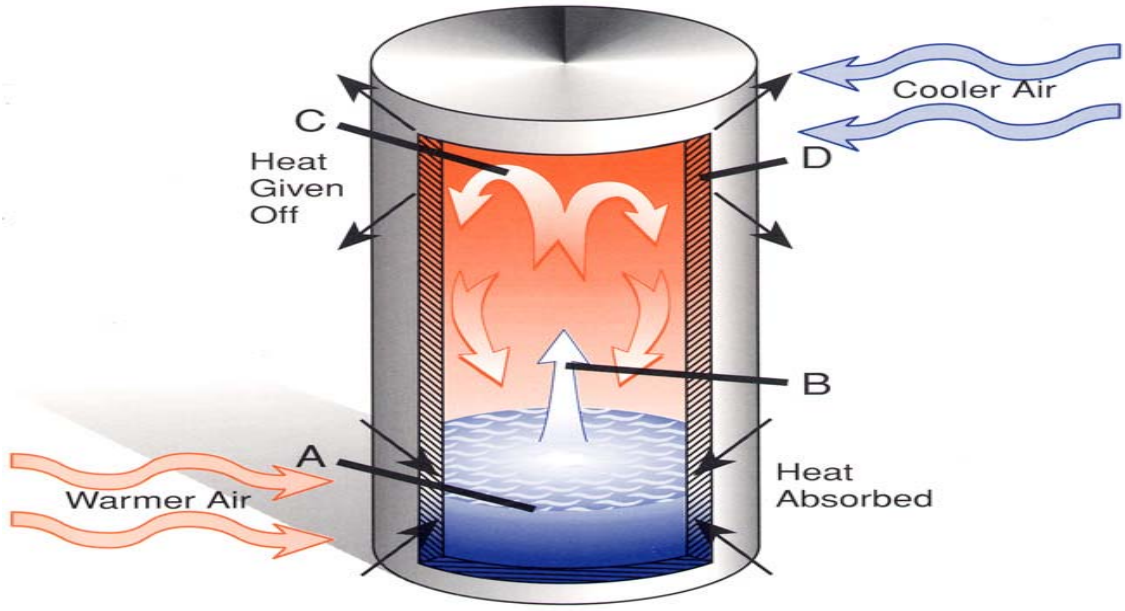

The refrigerant A absorbs heat from a heat source. In the above figure, the heat source is the warm air shown passing over it. The refrigerant changes state and rises as vapor B. At point C the vapor gives up heat to a heat sink, the cool air, where it condenses back to a liquid D. The condensed refrigerant is returned by gravity to complete the process. This vaporizing and condensing process continues as long as there is a temperature differential between the two ends of the heat pipe.

Schematic of Heat Pipe Applied to an Air Conditioning System

Shown below is a schematic of how a heat pipe is used in an air conditioning system to passively reduce the energy requirement while providing free reheat for dehumidification.

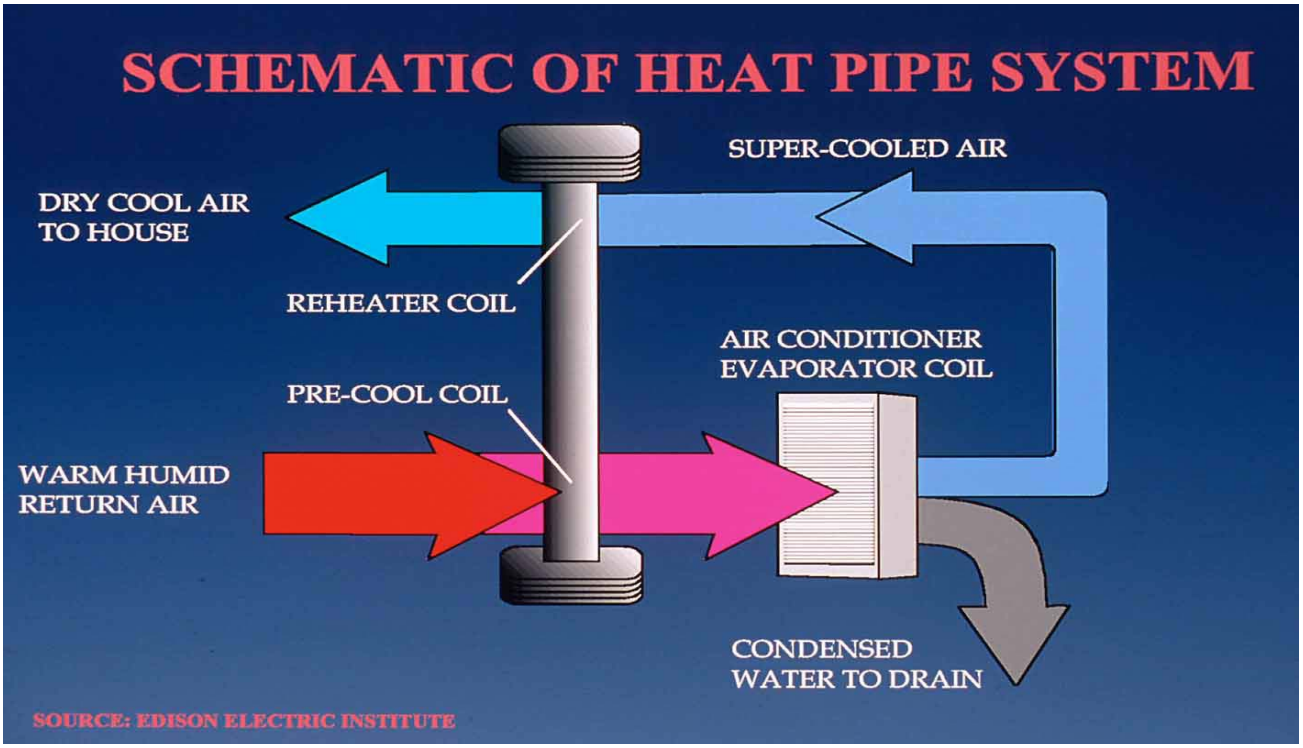

This reduction in humidity level has an additional benefit when we consider the comfort factor. By lowering the relative humidity people occupying an indoor air environment are comfortable at a higher room temperature.

Carolina Heat Pipe Inc.

"The Humidity Control Specialists"

Comfort Chart

We see this relationship of humidity and temperature in the comfort chart shown below. From this chart we can see that 76F at 90% RH feels like 82F. However 76F at 50% RH feels like a comfortable 70F.

		Relative Humidity									
		10%	**20%**	**30%**	**40%**	**50%**	**60%**	**70%**	**80%**	**90%**	**100%**
Temperature Fahrenheit	**76˚**		60˚	63˚	67˚	70˚	73˚	76˚	79˚	82˚	85˚
	78˚		63˚	67˚	70˚	74˚	76˚	78˚	82˚	85˚	89˚
	80˚	62˚	66˚	70˚	73˚	77˚	80˚	82˚	88˚	90˚	93˚
	82˚	63˚	68˚	72˚	76˚	80˚	82˚	88˚	90˚	93˚	103˚
	84˚	66˚	71˚	76˚	79˚	83˚	86˚	90˚	94˚	98˚	103˚
	86˚	68˚	73˚	78˚	82˚	86˚	90˚	94˚	98˚	103˚	
	88˚	70˚	76˚	81˚	85˚	89˚	93˚	98˚	102˚	108˚	
	90˚	73˚	78˚	84˚	88˚	93˚	97˚	102˚	108˚		
	92˚	75˚	82˚	87˚	91˚	96˚	101˚	108˚	112˚		
	94˚	77˚	84˚	90˚	95˚	100˚	107˚	111˚			
	96˚	79˚	87˚	93˚	98˚	103˚	110˚	118˚			
	98˚	82˚	90˚	98˚	101˚	107˚	114˚				
	100˚	85˚	92˚	99˚	105˚	111˚	118˚				
	102˚	87˚	95˚	102˚	108˚	115˚	123˚				
	104˚	90˚	98˚	106˚	112˚	120˚					

Energy savings vs. Temperature

The energy saving from maintaining comfort at a higher temperature is readily apparent from the following graphic developed by the South Carolina Electric and Gas Company.

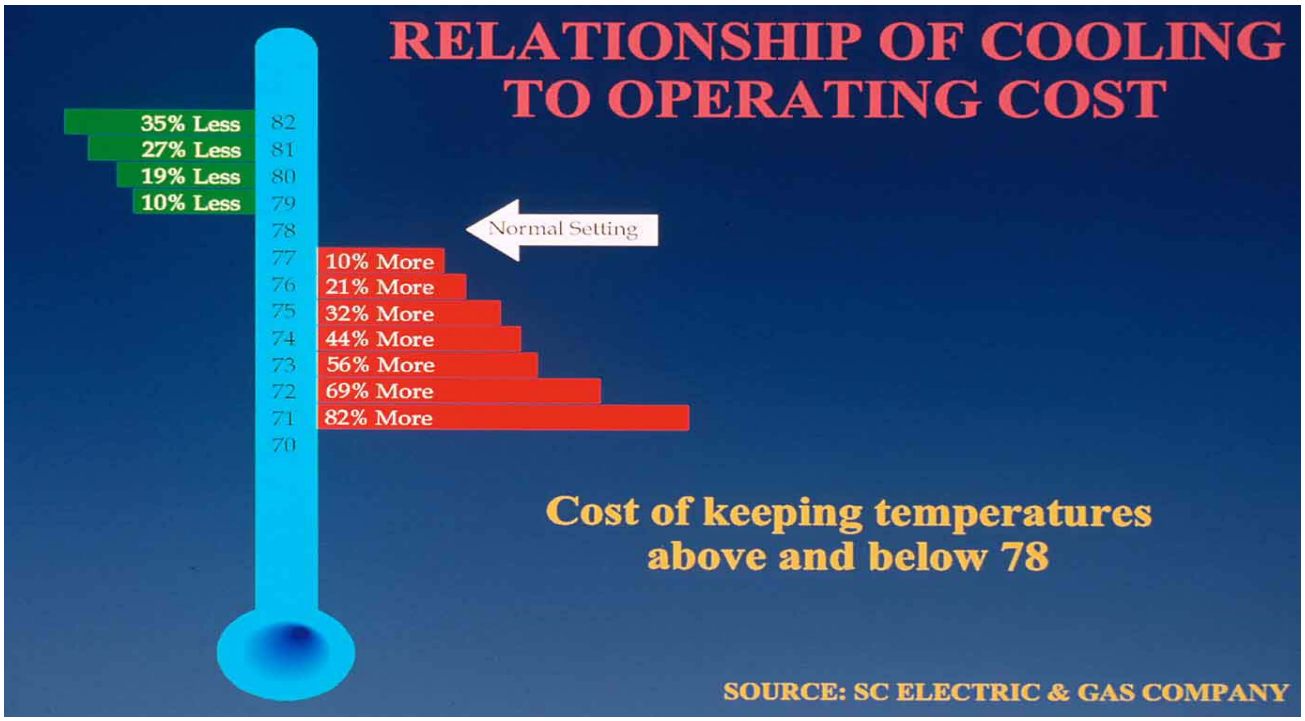

HARMFUL EFFECTS OF HIGH RELATIVE HUMIDITY

EFFECTS IN A BUILDING:

With high humidity comes a wide range of building problems. The following are examples that businesses have encountered with a history of high amounts of humidity in their buildings.

- The growth of mold and bacteria
- Deterioration of building materials
- Increased operating cost of HVAC systems
- Deterioration of film, books, photos and records
- Decreased performance of office equipment
- Reduced performance of air filters.

EFFECTS ON PEOPLE:

Studies have shown that high relative humidity can produce:

- A decrease in productivity
- An increase in on-the-job accidents
- An increase in absenteeism
- An increase in medical insurance claims
- An increase in litigation for poor indoor air quality

Studies at Johns Hopkins Hospital have shown that high humidity increases:

- Dizziness
- Migraine headaches
- Ulcers
- Chest pains
- Blood clots
- Rashes
- Cramps
- Blurred vision

RELATIVE HUMIDITY GUIDELINES

Relative Humidity

Level ①

0% - 30%	Most Fungi will not grow at these humidities.
40% - 55%	Optimal Building Humidity for all parts of the occupied space, chases, dropped ceilings, plenums, and behind drywall.②
60% - 70%	Approaching optimal range of humidity for growth; mold growth likely in such areas.
Above 70%	Optimal humidity levels for most fungal growth.
Above 90%	Typical humidity level downstream of cooling coils during cooling season without reheat.③

① - Relative humidity need only be elevated for a period of hours to start mold growth. Spore production may begin within about 24 hours for common species.

②- Depending on the building construction and ventilation system, plenums or spaces behind drywall may be in the HVAC system flow path and should therefore be considered to be part of the occupied space.

③- Because high humidity is unavoidable downstream of cooling coils without reheat, such areas should be able to be cleaned with liquid disinfectant and should allow easy inspection at least twice per year, before and after the cooling season.

Molds, Mildew and Yeast Are All Fungi.

They require four things to grow:

- Spores. Tiny seed-like particles that float in the air.
- A Surface to grow on.
- Nutrients to feed on. They can be found in either filtered air or on the growth surface.
- Moisture. Standing water or 70% relative humidity air is optimal for the growth of most fungi.

Of the above 4 requirements, only moisture can be controlled in a building; the three other factors will always be present, except in clean rooms that are designed to be dust-free. Indoor temperature is not an important factor. Fungi or mold as it is frequently referred to will almost always grow in a space where the humidity is often above 70%. This can be a small, damp cabinet or behind impermeable wallpaper.

Mold Identification Methods.

The human nose most easily detects mold. Molds or fungi can produce many different organic chemicals, such as the alcohol in beer or wine. Much more complex chemicals, which give fungi their characteristic "moldy" odor, are also produced through organic chemicals. A building that smells moldy, in almost all cases, is moldy. But a building may have heavy mold growth and no odor, when there is a lot of fresh air moving through the building. Molds release spores and live fragments into the air, which can be captured and grown using air-sampling methods. Spores are released in large quantities only during "fruiting" or when the fungi are disturbed. Fruiting, also known as sporulation, occurs unpredictably and usually for only a few hours over a period of weeks or months, so it is rarely detected in the air samples. Some mold spores are not viable when sampled in air and may not be detected. Some molds will not grow well in the culture tests used for detection and identification. Therefore, air sampling cannot tell you if mold is absent from a building. An air test that does not detect mold does not mean the building is mold-free.

Molds can most reliably be detected by collecting bits of the surface on which they are growing. These bulk samples are then sent to the lab either for microscopic examination or for growth in a culture. When measured in this way the lab can identify the type of mold and quantity present. This is the most reliable form of fungal testing for most types of molds.

Settling Plates.

Mold cannot be measured using settling plates. These are small, flat dishes of nutrient, which are opened and left in a building. These plates are supposed to capture mold spores from the room air. Unfortunately, spores are designed to float in the air and will not reliably settle on a plate. The information obtained from settling plates is worthless. Settling plates can deceive someone about the process of measuring fungal levels in a building. Such data is best ignored.

Humidity Control
&
Indoor Air Quality Issues

Some of the air quality issues that must be addressed in order to provide a healthy indoor air environment include:

The American Society of Heating, Refrigeration and Air Conditioning Engineers (ASHRAE) has developed a design handbook with a chapter devoted to humidifiers. This chapter shows a chart developed to reflect the effect of Room Humidity on Selected Human Health Parameters. It has been reproduced and shown on the following page because it graphically presents the optimum healthy indoor air environment in relation to the various health factors as a function of Relative Humidity.

From this ASHRAE chart those concerned with a healthy indoor air conditioned environment can readily and accurately see the health benefit from consistently holding the indoor air space at 50% Relative Humidity.

Such health factors as:

- Bacteria
- Viruses
- Fungi
- Mites
- Allergic Rhinitis
- Asthma
- Chemical Interactions

Are minimized or practically non-existent.

Furthermore when the relative humidity increases above 60% due to a humid atmosphere, these human health consideration become proportionally more dangerous to human health.

Why ASHRAE promotes maintaining 30-60% Relative Humidity

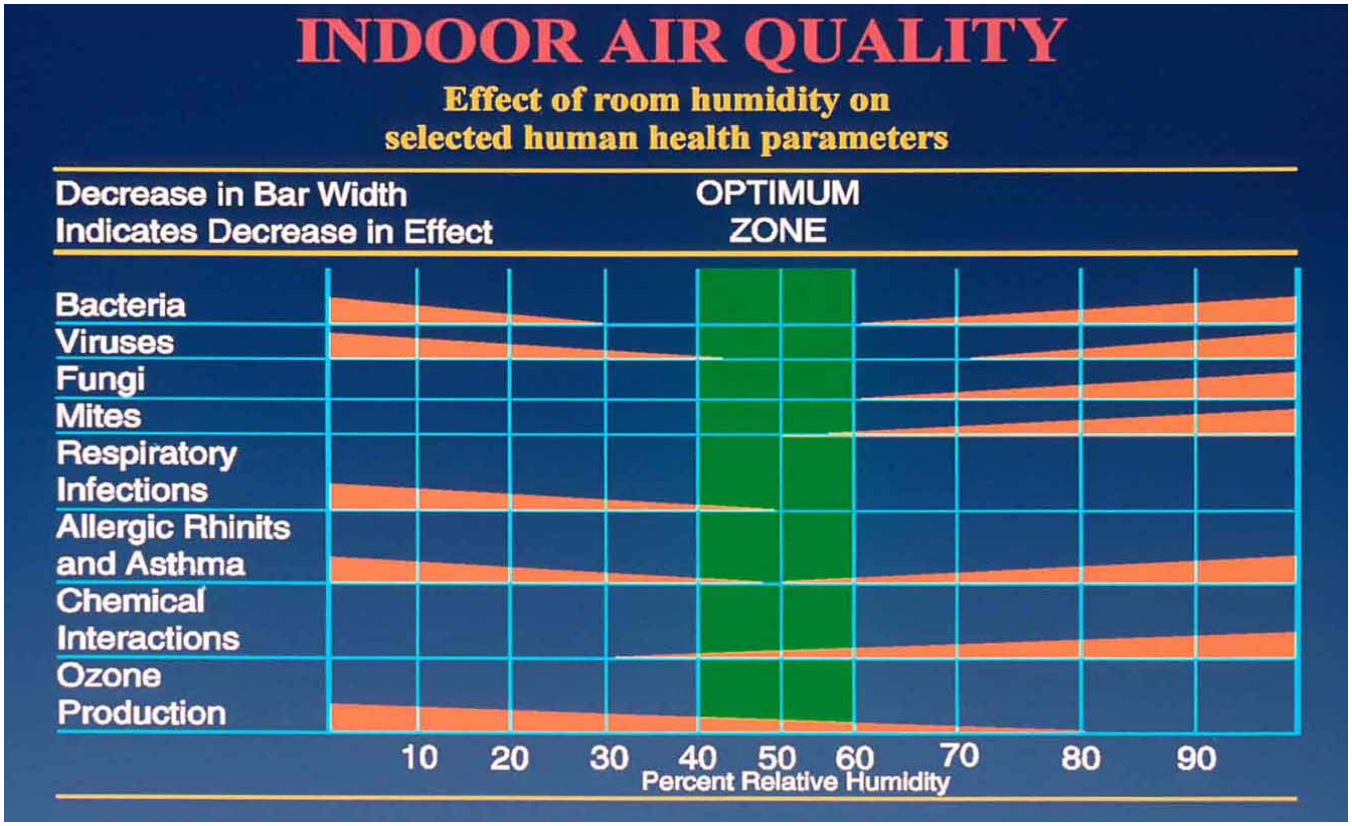

The ASHRAE design manual promotes air conditioning systems that maintain a 30-60% relative humidity in conditioned spaces.

This is because when the humidity level in occupied spaces is controlled, the moisture element is removed from the other elements that promote mold growth and most indoor air quality problems disappear.

ASHRAE Ventilation standard 62-2001 states that "the relative humidity in low velocity ducts should not exceed 70%.

From the ASHRAE chart, reproduced above, the connection between humidity level and the growth of bacteria, viruses, and fungus (molds) are apparent.

For these reasons, CHP has elected to develop products to help control the humidity levels in occupied spaces.

Modern Building Techniques and Air Conditioning Loads

Modern Building Techniques have actually increased the moisture removal load requirements of air conditioning systems.

Other factors that have complicated the indoor air quality of many modern buildings today is that Architects and Engineers have increased the dehumidification demands on air conditioning systems.

Dehumidification capacity reduced to improve energy efficiency

Many air conditioning manufacturers, in an effort to improve energy efficiency, have sacrificed dehumidification capacity.

How did this happen?

Architects are now specifying tighter energy efficient buildings. This has been achieved by increasing the amount of insulating materials used.

This design modification of the building envelope has lowered the cooling load (sensible load) for air conditioning systems. However, the moisture load (latent load) has remained constant or even increased as a percentage of the total air conditioning load.

In turn this has changed the duty of the air conditioning system which must both cool and dehumidify the air inside a building. The air conditioning system must now do more moisture removal and less temperature lowering.

The net effect is an increase in the ratio of the building latent (moisture removal) load versus the building sensible (temperature lowering) load.

Some Proposed Solutions by Other Manufacturers

In recognition of this development some manufacturers have elected to separate the dehumidification process from the cooling process.

Some have even proposed a separate outside air treatment system.

Such outside air systems would be operated in addition to the traditional air conditioning system much like an energy consuming room dehumidifier.

Defining And Controlling Moisture Load

The first step toward a humidity control solution is to properly define and control the moisture load

Moisture Load (Latent Load) is caused by such things as:

- Bathing & Showering
- Cleaning of Windows
- Mopping of Floors
- Humid Outside Air
- Drying Clothing
- Fish Tanks
- Cooking
- Plants
- Any other processes that promote the evaporation of water.

To maintain a healthy indoor environment, the humidity level in a building must be controlled by:

- Limiting moisture-producing sources
- Limiting the moisture infiltration as well as building loads.
- Requiring Architects, Building Owners, and Maintenance Personnel to Help

Architects must design a good vapor barrier for the building. If the walls and roof have not been specifically designed and properly protected with vapor retarders and drainage on the warm side to prevent the entry of moist air, concealed condensation within these constructions is likely to occur and cause serious deterioration. This in turn contributes to the moisture load within the building interior space.
Another opportunity for architects to help with indoor air quality is to limit their use of food sources for mold growth. One way is to limit the use of textiles and carpet in schools and health care facilities.

The building owners and maintenance personnel must clean and maintain the buildings to assure proper operation of the mechanical systems.

Air Conditioning Design Considerations

After the building loads are estimated, most air conditioning systems are specified to meet peak building loads. In addition thermostats are used to control the amount of cooling (sensible) load in the space.

The sensible load will vary with the sun load, the outside temperature, number of people, and the lighting and equipment sources. Unfortunately this causes a problem because most air conditioning systems operate at part load conditions and reductions in sensible loads and the latent loads are not proportionate. With humid outside air and the same people load, the latent load will increase while the air conditioning system is at part load.

In the case of a department store or a theatre at part load the air conditioning system may be providing only sensible cooling. It may not be removing any moisture from the outside air or the occupied space. This could happen if the cooling coil leaving air temperature is raised to match the part load need of the space. At full load a cooling coil designed to deliver 55ºF-air removes moisture and results in good dehumidification. However, if the same cooling coil is throttled back to part load it may only cool the air to 65ºF. The space temperature is maintained but very little moisture is removed. The result is high humidity; the space will feel humid and uncomfortable. It will also promote the growth of bacteria, viruses, and molds.

Fortunately There Is a Solution To This Design Problem

An effective way to maintain the moisture removal of an air conditioning system is to incorporate one of the many Humidity Control Solutions offered by Carolina Heat Pipe, Inc. Often these techniques involve modifying a rooftop or inside heating and cooling equipment so it is more effective dealing with the high proportion of moisture removal needed especially at part load conditions (95% of the time).

Carolina Heat Pipe is able to use techniques such as sub-cooling coils, hot gas coils, wrap-around coils or heat pipe systems that extract heat from where it is not needed and placed where it can be employed to maintain a 50% relative humidity. Most always these heat transfer techniques are made controllable so that when peak loads do occur, they will not prevent the air conditioning system from maintaining the proper temperature needed in the conditioned spaces being served. Some of these solutions are detailed in the Products Available section. Others may be suggested from past successes. If a particular problem requires a unique solution just give Carolina Heat Pipe a call.

Carolina Heat Pipe Inc.

"The Humidity Control Specialists"

II. CHP History & Approach to the Market

	Page
Carolina Heat Pipe, Inc. Mission Statement	II-1
Commitment to HVAC Excellence	II-2
Company Officers	II-3
Some Recognizable Commercial Installations by Carolina Heat Pipe, Inc	II-4
November 7, 2001-Post & Courier News Article	II-5
Article from "Port Charleston Magazine" June-July Issue	II-6
Summary of Humidity Control Solutions	II-7
Carolina Heat Pipe Approach to the Market	II-8
Energy Rating vs. Moisture Removal	II-9
Psychrometric Chart	II-10

109 Wappoo Creek Drive, Suite 4B Charleston, SC 29412 ph: 843.795.9965 fax: 843.795.9757
www.carolinaheatpipe.com

Carolina Heat Pipe, Inc. Mission Statement

Carolina Heat Pipe is over fourteen years old and was founded in 1993 as a marketing arm for equipment that could modify air conditioning equipment to more effectively deal with moisture removal. It has evolved as a company with a proven track record in a niche market. The industry segment that would most benefit from the types of equipment Carolina Heat Pipe Inc. sells is the air handler market.

The company furnishes passive (non-energy consuming) humidity control and energy recovery equipment for installation in commercial and industrial air conditioning equipment manufactured by others. The company integrates equipment they furnish into commercial air-conditioning equipment to make the resulting system more effective dealing with the high humidity typical for the southeastern region of the United States.

While Refrigeration and Air Conditioning equipment is generic in function, each manufacturer approaches the challenge in a unique manner that sets him apart from the competition. Such is the case with the Carolina Heat Pipe Inc. As is typical in the industry, Patent Pending protection exists for the specific equipment solutions the company furnishes.

Customer contact is both direct and through regional sales representatives. An Engineering Application support function is provided to assist with selecting the optimum solution for the particular project application. A Purchasing-Production Coordination support function insures that the design engineer's project includes the quality product he has specified.

To date, building owners and their consulting engineers have elected to specify that our customized solutions be incorporated into quality off the shelf air conditioning units in order to attain the dehumidification and energy efficiency they require. Warranty and certification apply to the base unit as it leaves the factory.

The Carolina Heat Pipe modifications are normally done in a shop environment to insure quality workmanship and comply with all applicable industry standards. They also are carefully coordinated with the base equipment supplier to ensure an enhanced installation.

Where appropriate, Field Support, Check Out and Retrofit services are available on a case-by-case basis.

The Carolina Heat Pipe Commitment to HVAC Excellence

Carolina Heat Pipe Inc. (CHP) is interested in becoming a willing participant to those HVAC teams concerned with excellence in providing energy efficient equipment as well as a healthy indoor air environment while simultaneously providing significant energy savings to owners.

CHP does this by early participation in the project. Depending on the basic design criteria, CHP will make recommendations for controlling humidity during the cooling season and may offer suggestions during the heating season for energy recovery. Early participation is especially important to properly design humidity control solutions that prevent hazardous mold and mildew situations from occurring or re-occurring.

CHP brings to the HVAC team excellence, developed over a 14-year period, in controlling humidity in facilities that utilize either chilled water or direct expansion systems. More recently, CHP has developed a controllable Thermosyphon System that can be applied to achieve energy recovery and dehumidification in conjunction with equipment provided by most all of the major HVAC equipment manufacturers. The net effect is a more energy efficient HVAC operating system.

In order to insure that CHP technology is properly integrated into a facility mechanical system, they willingly provide detailed analysis and guidelines to those responsible for both the HVAC system and the comfort of the people using the facility.

The Company Officers Are Seasoned Executives

Chief Executive Officer and President

The Company CEO and President is a graduate engineer who majored in Heat Engineering at SUNY Maritime College and completed graduate refrigeration work at Columbia University (NY). He was a new product manufacturing program manager in the Machinery and Systems Division of Carrier Air Conditioning Company and is past President (1998-1999) and Regional Vice Chair (2000-2003) of the Charleston Chapter of the American Society of Heating, Refrigeration and Air Conditioning Engineers (ASHRAE). In the January 2001 issue of the ASHRAE Journal he authored a feature article, titled "Air Conditioning in Submarines" and is a voting member of ASHRAE Technical Committee (TC8.10) "Mechanical Dehumidification and Heat Pipes".

The Chief Engineering Consultant

The Chief Engineering Consultant is a graduate of The University of Kansas and a registered PE. He has worked for a variety of mechanical engineering firms responsible for HVAC, plumbing design, and construction. He has 14 years of experience on a variety of projects that have utilized Heat Pipe Systems to improve both chilled water and direct expansion air conditioning systems. His many years as an HVAC system consultant include commercial, institutional, and industrial building applications where temperature, humidity, and operating efficiency have all been important owner considerations.

Some Recognizable Commercial Installations

The company has a base load of customers that depend upon Carolina Heat Pipe to furnish their air conditioning systems for dehumidification and energy recovery. Some of the recognizable commercial installations that contain Carolina Heat Pipe furnished equipment include:

White House Visitor Center
Washington, D.C.

Fort Sumter Tour Boat Facility
Charleston, SC

Aiken Rhett Historical Home
Charleston, SC

Charleston Air Force Base
Charleston, SC

Numerous K-12 Schools in South Carolina

Several very large residences
Kiawah Island, SC

Governor's Complex
Columbia, SC

Vanderbilt University
Nashville, TN

USMC Depot, Etc.

Miami U. Farmer School Business
Cincinnati, OH

Citadel Archives
Charleston, SC

Green County Gov Complex
Snow Hill, NC

Howard Baker County Court House
Knoxville, KY

UNC Memorial Hall
Chapel Hill, NC

Medical University of South Carolina
Charleston, SC

NOAA Facility
Charleston Naval Base, SC

Strom Thurmond Fitness Center
Columbia, SC

U.S. Naval Weapons Station
Charleston, SC

Wright State Biolab III
Dayton, OH

Eurand R&D Lab
Dayton, OH

USMC
Paris Island, SC

Ft. Jackson
Columbia, SC

University of S. Florida
Tampa, FL

CSU Residence Halls
North Charleston, SC

Close customer contact and project involvement has enabled Carolina Heat Pipe, Inc. to learn the needs of the industry and develop its own line of products that better meet the needs of our customers. Actual performance and benefits from these installations can be requested by contacting us via email or phone.

Section III of this catalog reflects some of those products already available. By working with our customers, the company intends to build upon these successful installations and provide even more advanced systems to satisfy the public's increasing concern for improved indoor air quality and energy recovery in a cost effective manner.

Charleston Post and Courier, November 7, 2001

Charleston pros dry White House

BY JIM PARKER
Of The Post and Courier Staff

When tourists get ready to tour the Oval Office, they won't be sweat-soaked or parched, thanks to a Charleston air treatment company.

Carolina Heat Pipe is installing a humidity control system this week at the White House Visitor Center, the 25,000-square-foot ballroom where travelers congregate before official tours of the president's Washington, D.C., home and office.

The "heat pipe thermosyphon" is a passive dehumidifier that uses little energy, said Richard W. Trent, president. The visitor center, run by the National Park Service, contacted Carolina Heat Pipe after hearing the 8-year-old company put in a unit at another park service property, Fort Sumter.

"We were all excited about it. It was right out of the blue," he said.

The visitor center is housed on the ground floor of the six-story Commerce Department building, within walking distance of the White House on Pennsylvania Avenue.

Carolina Heat Pipe's air handler is 24 feet wide, 11 1/2 feet tall and circulates 28,000 cubic feet of air a minute. The thermosyphon recycles heat from a warm point to a cooler point and back. The device has liquid refrigerant that traps heat. The liquid evaporates and the vapor flows to a warmer section where it condenses and releases heat. The heat flows back by the force of gravity to the refrigerant section and the cycle begins again.

The device, which does not require a pump or compressor, is expected to pay for itself in two years, he said.

This is Carolina Heat Pipe's first job in the Washington, D.C., area.

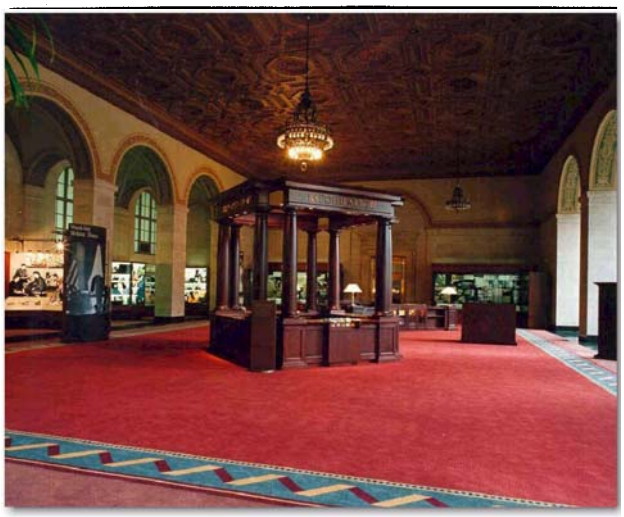

More than a million tourists pass through the White House Visitor Center every year. A Charleston company, Carolina Heat Pipe, is installing a humidity-control system this week at the 25,000-square-foot ballroom where travelers congregate before they take the official tours of the president's Washington, D.C., home and office.

"There's a lot of opportunity up there," Trent said.

Heat pipes are used as low-cost energy savers in places with high humidity such as the Southeast. It's not just tropical climates, though. The trans-Alaska pipeline has thousands of pipes to dissipate hot air that builds up when oil is pumped through it. Without the passive heat pipes, the underlying tundra could thaw and cause the pipeline to collapse, Trent said.

Jim Parker *covers banking, insurance and investments. He can be reached at 937-5542 or jparker@postandcourier.com.*

Carolina Heat Pipe Inc.

"The Humidity Control Specialists"

Carolina Heat Pipe receives Export Achievement Award from United States Department of Commerce

May 2002

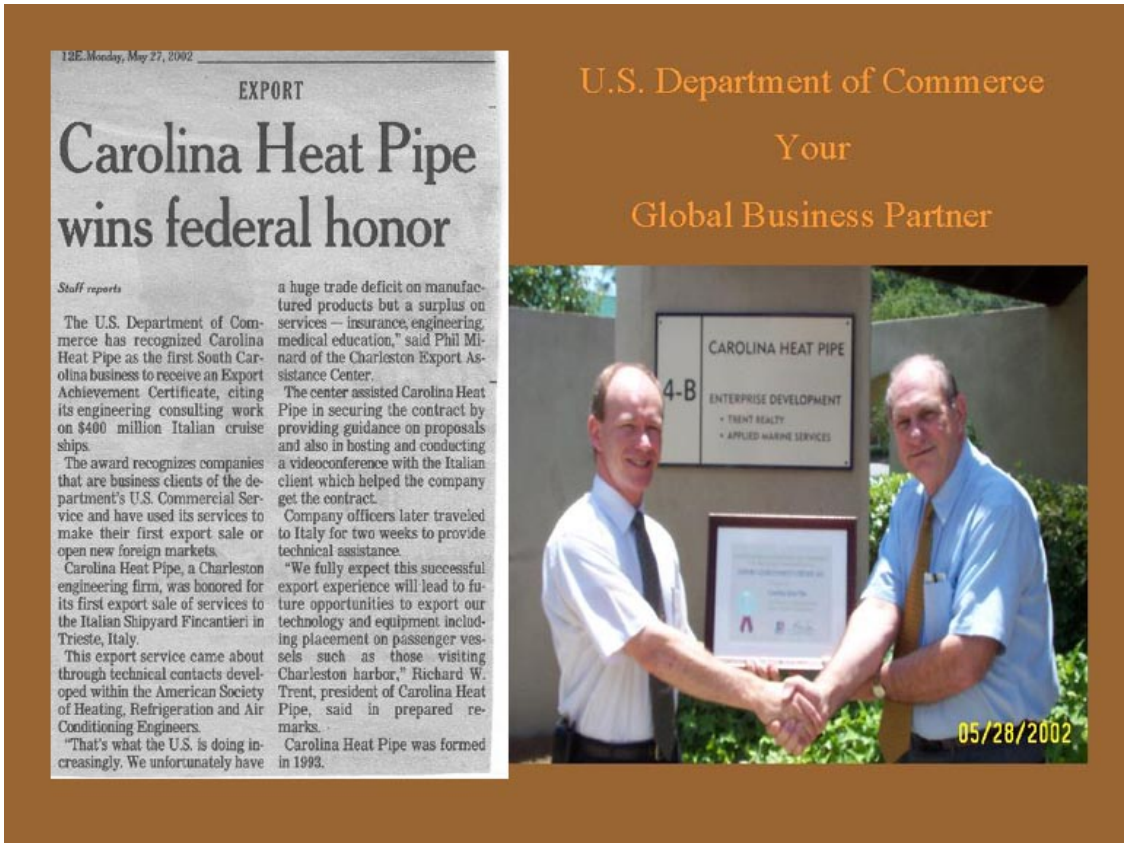

12E Monday, May 27, 2002

EXPORT

Carolina Heat Pipe wins federal honor

Staff reports

The U.S. Department of Commerce has recognized Carolina Heat Pipe as the first South Carolina business to receive an Export Achievement Certificate, citing its engineering consulting work on $400 million Italian cruise ships.

The award recognizes companies that are business clients of the department's U.S. Commercial Service and have used its services to make their first export sale or open new foreign markets.

Carolina Heat Pipe, a Charleston engineering firm, was honored for its first export sale of services to the Italian Shipyard Fincantieri in Trieste, Italy.

This export service came about through technical contacts developed within the American Society of Heating, Refrigeration and Air Conditioning Engineers.

"That's what the U.S. is doing increasingly. We unfortunately have a huge trade deficit on manufactured products but a surplus on services — insurance, engineering, medical education," said Phil Minard of the Charleston Export Assistance Center.

The center assisted Carolina Heat Pipe in securing the contract by providing guidance on proposals and also in hosting and conducting a videoconference with the Italian client which helped the company get the contract.

Company officers later traveled to Italy for two weeks to provide technical assistance.

"We fully expect this successful export experience will lead to future opportunities to export our technology and equipment including placement on passenger vessels such as those visiting Charleston harbor," Richard W. Trent, president of Carolina Heat Pipe, said in prepared remarks.

Carolina Heat Pipe was formed in 1993.

Summary of Humidity Control Solutions

Carolina Heat Pipe customizes air conditioning units so that they are more effective in maintaining a healthy environment.

For direct expansion systems Carolina Heat Pipe provides:

- Controllable Run Around Thermosyphon Heat Pipe Heat Exchangers
- Subcool Reheat Heat Exchangers
- Hot Gas Reheat Heat Exchangers
- Or a combination of these Heat Exchangers

For chilled water systems Carolina Heat Pipe also provides just the:

- Controllable Run Around Thermosyphon Heat Pipe Heat Exchangers

Carolina Heat Pipe Heat Recovery Solutions

The same concepts developed for the controllable TRAHP™ lead to the Split System energy recovery TRAHP™. When a section is strategically placed in a building exchange air stream and connected to a section placed in a supply air stream, sensible energy transfer can be achieved in a controlled manner without the risk of cross contamination.

Carolina Heat Pipe Product Approach to the Market

Typically Carolina Heat Pipe incorporates their patented heat exchangers into new or existing equipment manufactured by others.

Rather than manufacture an existing product and compete with established equipment manufacturers, Carolina Heat Pipe has elected to enhance the performance of established air conditioning equipment manufactured by others.

Many times this equipment can be modified by Carolina Heat Pipe en route to a job site. Often a modular unit can be furnished with instructions for field installation.

When Carolina Heat Pipe Passive Thermosyphon Run Around Heat Pipe heat exchanger systems are incorporated into a base unit, they will efficiently remove heat from where it is not needed and placed where it is needed. This will pre-cool the air entering the cooling coil and improve the latent removal capacity of the air conditioning system while lowering the relative humidity of the supply air.

When energy recovery is the objective, the Split Sytem TRAHP™ can be incorporated in a manner that provides energy recovery during the heating season or precooling during the cooling season or both precooling and reheating when energy efficient dehumidification is the objective.

Energy Rating vs. Moisture Removal

In order to understand the energy efficiency of a unit, it is essential to consider the equipment as well as the performance specified for the application.

In regions of high humidity the ability to remove moisture (latent heat) is an important factor. Unfortunately it is possible for most manufacturers to rate their equipment at cooling loads above the dew point. This results in a high and desirable SEER.

By definition SEER - Seasonal Energy Efficiency Ratio - is defined as the total cooling of a central unitary air conditioner or unitary heat pump in BTU's during its normal annual usage period for cooling divided by the total electric energy input in watt-hours during the same period.

When the normal period includes dehumidification, three times as much energy is consumed to cool the same amount of air.

This is the best illustrated with following moisture removal example:

Moisture Load In Air

It takes about 21,600 BTUH to cool 1000 CFM of air at 95º/50% Rh to75º/95% Rh.
(Sensible load = 1.08 x CFM x delta T)

It takes about 65, 600 BTUH to cool 1000 CFM of air at 75º/95% Rh to 55º/95% Rh. Of this 65,600 BTUH, 43,180 BTUH is due to lowering the grains of moisture in the air.
(Latent load = .68 x CFM x delta g)
*g = grains of moisture/# of dry air
(Note: 7000 grains = 1 lb.)

Lowering Humidity is twice as hard as cooling.

$$\frac{\text{Latent}}{\text{Total}} = \frac{43{,}180}{65{,}600} = 66\% \text{ Latent Load}$$

Carolina Heat Pipe Incorporated specializes in making air conditioning systems more effective in removing moisture, while providing free reheat (no external energy consumption) for dehumidification.

Carolina Heat Pipe Inc.

"The Humidity Control Specialists"

Latent load vs. Sensible Load

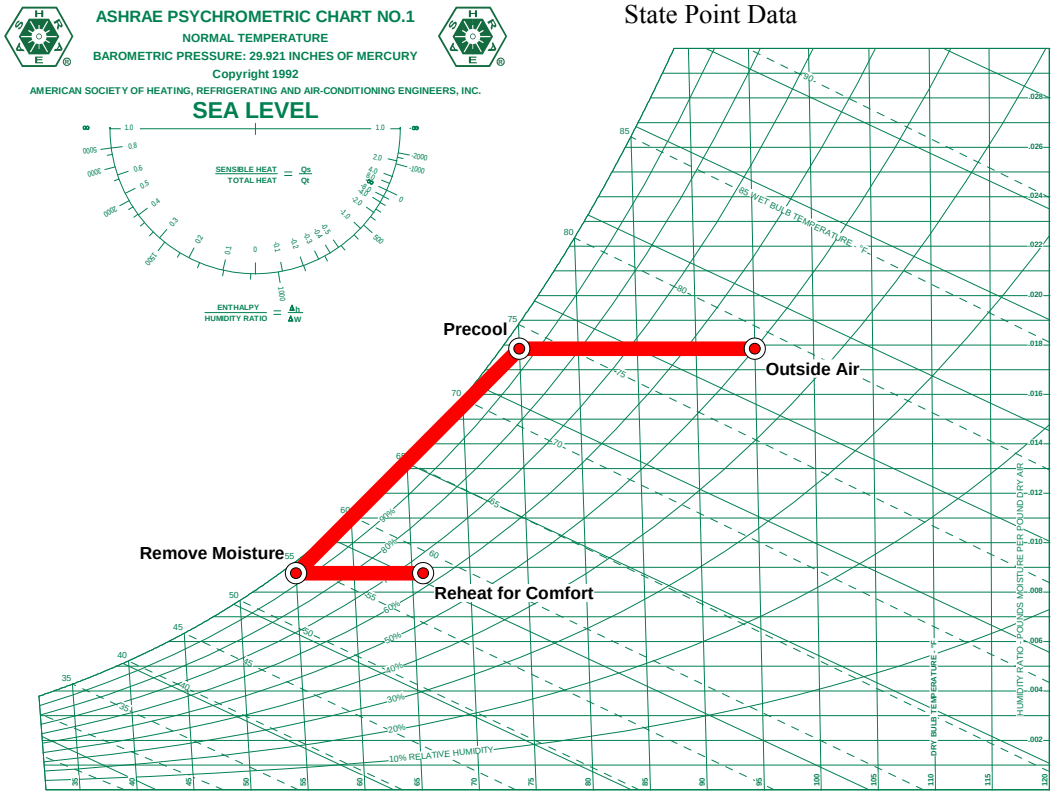

State Point	Dry Bulb °Fdb	Wet bulb °Fwb	Dew point °Fdp	Relative Humidity %Rh	Humidity Ratio grains/lb	Specific volume ft^3/lb	Enthalpy Btu/lb
Outside Air	95.00	79.04	73.45	50.00	124.6	14.41	42.43
Precool	75.00	73.89	73.48	95.00	124.7	13.89	37.49
Remove Moisture	55.00	54.17	53.56	95.00	61.2	13.18	22.69
Reheat for Comfort	65.98	58.49	53.56	64.29	61.2	13.46	25.37

Process Data

Sensible Heating

Starting State Point: Remove Moisture

Ending State Point: Reheat for Comfort

Data: 11,873 Btu/hr heating (variable)

Sensible cooling

Starting State Point: Outside Air

Ending State Point: Precool

Data: 20,353 Btu/hr cooling (constant)

Cooling with Dehumidification

Starting State Point: Precool

Ending State Point: Remove Moisture

Enthalpy difference: 14.80 Btu/lb; Refrigeration constant: 4.43

Total cooling: 65,621 Btu/hr (5.5 tons); Moisture removal: 40.2 lb/hr

System Data:

Air flow rate: 1,000 cfm

Coil data: Cooling coils: 65,621 Btu/hr Heating coils: 11,873 BTU/hr

Definitions:

Precool: Energy used to only remove sensible heat and lower temperature 20 degrees

Remove Moisture: Energy used to remove sensible and latent heat and lower temperature 20 degrees

Reheat for Comfort: Energy needed to reheat to a comfortable level

III. Products Available From Carolina Heat Pipe, Inc.

		Page
General Products Available		III-1
A.	ST Mach I - Thermosyphon Run-Around Heat Pipe (TRAHP™)	III-A-1
B.	Controllable Hot Gas Reheat	III-B-1
C.	Heat Recovery Heat Pipe Solutions	III-C-1
D.	Customized Outside Air Supply Package Unit	III-D-1
E.	Subcool Reheat of Refrigerant for Improved Dehumidification	III-E-1

Products Available

The task of an air conditioning system is both temperature reduction (sensible load) and dehumidification (latent load). Often modern air conditioning and heat pump systems fail to satisfy the latent load. There are several reasons for this problem. They include improved envelope construction and a new generation of efficient air conditioners that have less dehumidification than their inefficient predecessors. Often only a thermostat controlled these air conditioners.

This has resulted in complaints such as "my air conditioning unit is not keeping me as comfortable as it once did" or "my home is more energy efficient, but now the air feels cool and clammy" or perhaps "I am concerned about fungal contamination (mold, mildew, etc.) in my ductwork and occupied spaces". The building owner or occupant then may ask, "**what humidity control technologies are available and what are their operating cost considerations"?**

The following alternative technologies are available:

Humidity Control Technologies	Operating Cost Factors
Dehumidifier	Unit's power consumption Additional heat load More maintenance
Waste Heat Reheat	Additional heat load Coil pressure drop More maintenance
Hot Water Reheat	Oversized cooling system Boiler, piping, pumps Coils Electrical supply Valves & Controls More maintenance
Electric Reheat	Oversized cooling system Heat strips Electrical supply Controls More maintenance

Carolina Heat Pipe Inc.

"The Humidity Control Specialists"

Humidity Control Technologies	**Operating Cost Factors**
Heat Recovery Heat Wheel	Moving parts to fail Cross contamination High Coil pressure drop Longevity More maintenance and repair
Thermosyphon Run Around Heat Pipe (TRAHP) Heat Exchanger	Low Coil pressure drop Little to no maintenance No moving parts It's passive and controllable

Carolina Heat Pipe Inc. has developed a series of products that when applied to an air conditioning or heat pump system will make them more effective dealing with moisture removal (latent load) while lowering the relative humidity of the air being supplied to the occupied space.

Some of these humidity control solutions and energy recovery solutions are detailed in the following pages and include:

A. **Thermosyphon Run Around Heat Pipe -- TRAHP® Model: ST Mach 1** - Passive controllable dehumidification with a heat pipe made to function as a sensible thermosyphon. It may be installed in an air handler or a roof top unit.

B. **Dehumidification with Controllable Hot Gas Reheat** -Various forms of passive controllable dehumidification using waste heat reheat. Intended primarily for direct expansion systems.

C. **Heat Recovery Heat Pipe Solutions** - Passive controllable heat recovery for air streams. Air streams need not be adjacent to each other. Also Duct to Duct Heat Recovery

D. **Customized Outside Air Supply Package Unit** - A customized line of air-cooled packaged heat pumps with option for energy efficient dehumidification, straight cooling and strip heat to supply conditioned 100% outside air.

E. **Subcool Reheat of Refrigerant for Improved Dehumidification** - Subcool Reheat of refrigerant for improved dehumidification is applicable to Direct Expansion Straight Cool and Heat Pumps in retrofit, renovations and new installations. The System involves introducing a special custom designed Subcool Reheat refrigerant coil in the air stream downstream of the evaporator coil and piping the liquid refrigerant from the condenser coil through this subcool coil and then on to the thermal expansion valve that supplies the evaporator coil.

Carolina Heat Pipe Inc.

"The Humidity Control Specialists"

THERMOSYPHON RUN AROUND HEAT PIPE -- TRAHP™
Model: ST Mach 1

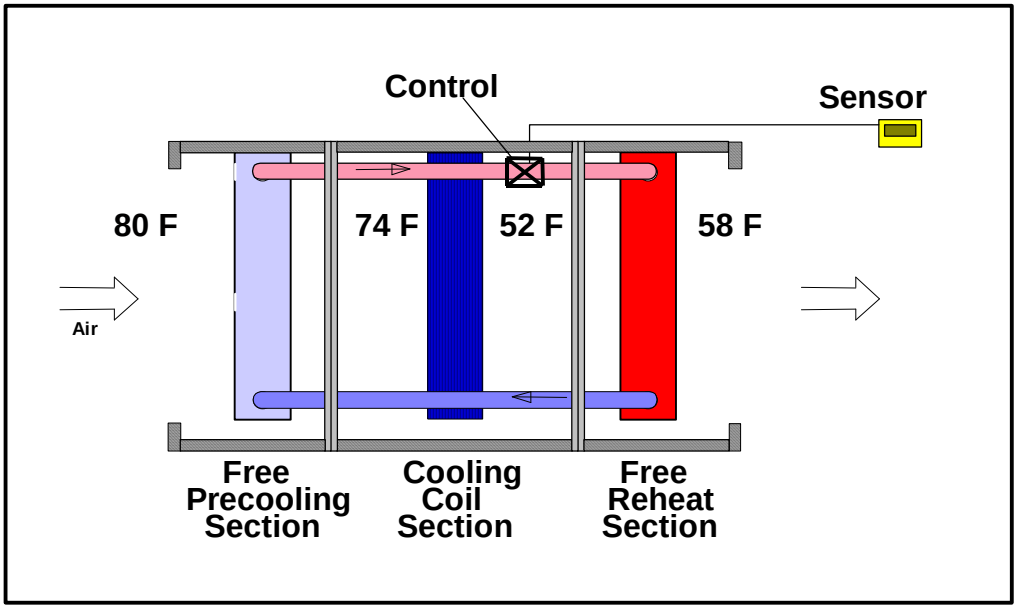

OPERATING PRINCIPLE

A Thermosyphon Run Around Heat Pipe (TRAHP™) is an efficient device used to transfer heat from a warm point to a cooler point. All that is needed is the force of gravity and the fact that a fluid evaporates when it absorbs heat and releases heat when it condenses. Liquid refrigerant in the precool section absorbs heat, evaporates, and the vapor flows to the reheat section where it condenses and releases heat. The condensed refrigerant flows back to the precool section by the force of gravity to begin the cycle again. The Thermosyphon Run Around Heat Pipe (TRAHP™) process is a passive process that does not require a pump or compressor and does not consume any energy.

Carolina Heat Pipe Inc.

"The Humidity Control Specialists"

THERMOSYPHON RUN AROUND HEAT PIPE -- TRAHP™

Typical Model: ST Mach 1 In Production

Shown above are typical TRAHP™ sections in production.

When incorporated into an air handler these TRAHP™ sections can be used to treat outside air or mixed air for proper humidity control without adding external energy. In such an application the installation becomes a Thermosyphon Run-Around Heat Pipe (TRAHP™).

These TRAHP™ sections can also be used for energy recovery when properly positioned in an exhaust air stream and the supply air stream.

PASSIVE DEHUMIDIFICATION

With a Thermosyphon Run Around Heat Pipe -- TRAHP™

Because this heat transfer is controllable, improved comfort and efficiency in an air conditioning system becomes attainable.

By passively transferring sensible heat from the entering side of a cooling coil to the leaving side, the ST Mach 1 reduces operating costs by as much as 70% compared to a conventional reheat system.

The ST Mach 1 is applicable to chilled water and direct expansion systems in recirculation or 100% outside air configurations. Carolina Heat Pipe can factory install the TRAHP™ in your equipment or field retrofit at your job site.

Control makes sense because the operation of reheat, even passive reheat, when it is not required, wastes energy and creates discomfort by making rooms too warm. The use of uncontrolled reheat increases capital costs by requiring the installation of an air conditioning system with higher capacity in order to meet design conditions.

Because high humidity is one of the leading causes of Indoor Air Quality problems, doesn't it make sense to use our thermosyphon?

Carolina Heat Pipe's Thermosyphon Run Around Heat Pipe -- TRAHP™ is a simple passive reheat system consisting of two uniquely configured Heat Pipe Thermosyphon coils which are positioned on either side of your cooling coil. Heat is transferred from the entering side of the cooling coil to the leaving side by means of the natural heat pipe thermosyphon process in which refrigerant boils on the entering side and condenses on the leaving side. A compressor is not used and the only moving part is the control valve.

When incorporated in an air handler the TRAHP™ will remove more moisture using less energy and provide you with a healthier, more comfortable environment.

WHY USE A HEAT PIPE MADE TO FUNCTION AS A SENSIBLE THERMOSYPHON?

- **It can be controlled for optimum performance**. It's controllable. Control is essential to comfort and efficiency in an air conditioning system.

- **The system operating cost is minimized**. By passively transferring sensible heat from the entering side of a cooling coil to the leaving side, Carolina Heat Pipe's Thermosyphon Run Around Heat Pipe (ST MACH I) reduces operating costs by as much as 70% compared to a conventional reheat system.

- **It lowers the capacity requirements of an air conditioning system.** The operation of reheat, even passive heat, when it is not required, wastes energy and creates discomfort by making rooms too warm. The use of uncontrolled reheat increases capital costs by requiring the installation of an air conditioning system with higher capacity in order to meet design conditioning.

- **High Humidity is one of the leading causes of indoor air quality problems.** Since the air leaving the cooling coil is at saturation Carolina Heat Pipe's Thermosyphon Run Around Heat Pipe immediately lowers the relative humidity of the supply air before it enters the duct by reheating the air leaving the cooling coil. Mold cannot thrive in this drier environment.

- **Higher thermostat settings become possible.** By maintaining a lower relative humidity in the space, thermostats can be adjusted to a higher setting while maintaining comfort. For every degree at which the thermostat set point can be raised, the air conditioning system energy consumption is reduced by 7-9%.

- **Higher chilled water supply temperature becomes possible by precooling of the cooling coil entering air.** The latent capacity of the cooling coil is increased, allowing the chilled water temperature to be raised several degrees while holding the same dewpoint temperature of the cooling coil. This increases the energy efficiency of the chiller and results in operating cost savings as well as conserving chiller capacity.

An active reheat system can be replaced. Carolina Heat Pipe's Thermosyphon Run Around Heat Pipe (ST MACH I) can be used as a direct replacement of or in conjunction with electric, hot water or waste heat reheat systems. Because the ST MACH I reheat is passive, there is no operating cost to produce it. Because the reheat is derived from the entering air, it does not impose an additional load on the compressors, as does active reheat in a direct expansion air conditioning system. This results in substantial capital savings and operating cost savings of 30-70%. These types of results have been verified by utilities in monitored products.

Specification

Thermosyphon Run Around Heat Pipe Loop -- TRAHP™

1.0 General

1.1 Furnish, install, test, and place into service a passive dehumidifying, controllable, Thermosyphon Run Around Heat Pipe Loop, air-to-air heat exchanger as shown in the design drawings and schedule to be manufactured by Carolina Heat Pipe, Inc.

1.2 The Thermosyphon Run Around Heat Pipe Loop will transfer heat from the air entering the cooling coil into the air leaving the cooling coil, using the heat pipe thermosyphon loop process of passive vapor mass transfer, without the use of any pumps, compressors or other means of moving the working fluid.

1.3 The air handler manufacturer will provide either two dedicated sections or a cooling coil cabinet of sufficient depth to accommodate the Thermosyphon Run Around Heat Pipe Loop while providing the space, as specified by the Engineer, between Thermosyphon Run Around Heat Pipe coils and the cooling coil.

1.4 The Thermosyphon Run Around Heat Pipe Loop shall be capable of operating at temperatures ranging from –80F to 130F.

1.5 The Thermosyphon Run Around Heat Pipe Loop shall be factory installed at Carolina Heat Pipe, Inc. or field installed by factory certified technicians.

1.6 Carolina Heat Pipe will provide a five-year warranty on the performance of the Thermosyphon Run Around Heat Pipe Loop.

2.0 Construction

2.1 The final circuiting and working fluid charge of the Thermosyphon Run Around Heat Pipe Loop will be determined by Carolina Heat Pipe Engineers to meet or exceed the specified performance.

2.2 The Thermosyphon Run Around Heat Pipe Loop shall be constructed of seamless copper tubing which is permanently expanded into aluminum or copper fins to form a rigid and complete metal to metal contact between the copper tube and the fin collar at all operating conditions.

2.3 The Thermosyphon Run Around Heat Pipe Loop's working fluid shall conform to Group I of the American National Safety Code for Mechanical Refrigeration.

2.4 The Thermosyphon Run Around Heat Pipe Loop shall be controllable in an infinitely variable manner in the range of off to full capacity by means of one control device, located in the interconnecting vapor line, for each increment of 75,000 BTUH of heat transfer.

3.0 Delivery, Storage and Handling

3.1 The equipment for installation of the Thermosyphon Run Around Heat Pipe Loop (complete unit, or the Cooling Coil Section attached to the two dedicated sections for the Thermosyphon Run Around Heat Pipe Loop) will be shipped from the Air Handler Manufacturer to the Carolina Heat Pipe production facility at least 21 days prior to the date on which the completed system is to be delivered to the job site.

3.2 The Air Handlers will be stored in a clean, dry place protected from weather, dirt, fumes, water and physical damage.

3.3 The Air Handlers shall be handled carefully to prevent damage, breaking, denting or scoring.

3.4 The Air Handlers will be delivered by the date on which they are required at the job site.

Specification

Dehumidification with a Roof Top Unit modified by Carolina Heat Pipe using a controllable Thermosyphon Run Around Heat Pipe Loop -- TRAHP™

1.0 General

1.1 In addition to the standard specification, provide a Roof Top Unit modified by Carolina Heat Pipe, Inc. to include a Controllable Thermosyphon Run Around Heat Pipe Loop.

1.2 The modification of the standard Roof Top unit shall include furnishing and installing a passive, controllable, wrap around style, Thermosyphon Run Around Heat Pipe Loop, air-to-air heat exchanger.

1.3 The Thermosyphon Run Around Heat Pipe Loop, shall be capable of transferring heat from the air entering the cooling coil/chill water coil into the air leaving the cooling coil/chill water coil, using the heat pipe thermosyphon loop process of passive vapor mass transfer, without the use of any pumps, compressors, or other means of moving the working fluid.

1.4 The Thermosyphon Run Around Heat Pipe Loop shall be capable of operating at temperatures ranging from -80F to 130F.

1.5 The Thermosyphon Run Around Heat Pipe Loop shall be installed at the production facility specified by Carolina Heat Pipe, Inc.

1.6 Carolina Heat Pipe will provide a five-year warranty on the performance of the Thermosyphon Run Around Heat Pipe Loop.

2.0 Construction

2.1 In addition to the standard construction specification for Roof Top Units, the final circuiting and working fluid charge of the Thermosyphon Run Around Heat Pipe Loop shall be determined by Carolina Heat Pipe engineers to meet or exceed the specified performance.

2.2 The Thermosyphon Run Around Heat Pipe Loop shall be constructed of seamless copper tubing which is permanently expanded into aluminum or copper fins to form a rigid and complete metal to metal contact between the copper tube and the fin collar at all operating conditions.

2.3 The Thermosyphon Run Around Heat Pipe Loop's working fluid shall conform to Group 1 of the American National Safety Code for Mechanical Refrigeration.

2.4 The Thermosyphon Run Around Heat Pipe Loop shall be controllable, in a variable manner, over the range of "off to full" capacity by means of one control valve.

3.0 Delivery, Storage and Handling

3.1 The Roof Top Units shall be shipped to the Carolina Heat Pipe production facility for installation of the Thermosyphon Run Around Heat Pipe Loop 21 days prior to the date on which the completed unit is to be delivered to the job site.

3.2 While awaiting installation of the Thermosyphon Run Around Heat Pipe Loop the Roof Top Units shall be stored in a clean, dry place protected from the weather, dirt, fumes, water and physical damage.

3.3 During the process of installing the Thermosyphon Run Around Heat Pipe Loop, the Roof Top Units shall be handled carefully to prevent damage, breaking, denting or scoring.

3.4 The Roof Top Units complete with the installed Thermosyphon Run Around Heat Pipe Loop shall be delivered by the date on which they are required at the job site.

Controlled Thermosyphon Run Around Heat Pipe (TRAHP) Chilled Water Air Handler

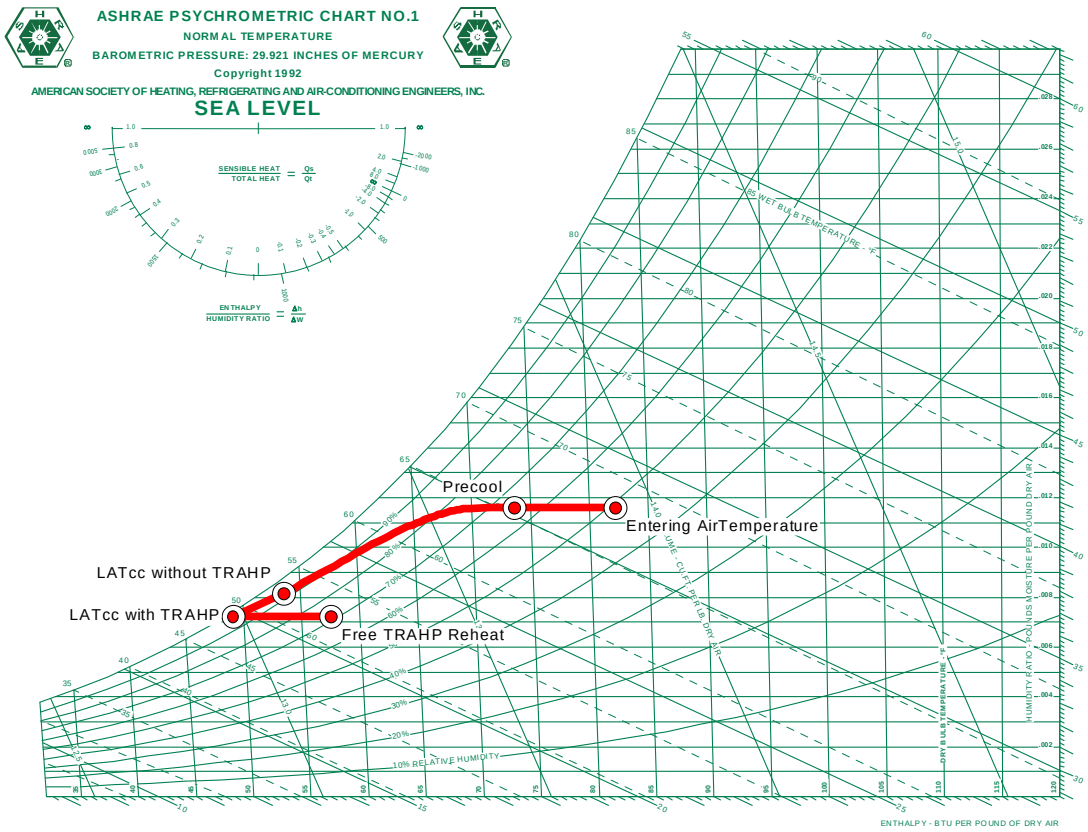

Carolina Heat Pipe Inc.

"The Humidity Control Specialists"

State Point Data

State Point	Dry Bulb °Fdb	Wet bulb °Fwb	Dew point °Fdp	Relative Humidity %Rh	Humidity Ratio grains/lb	Specific volume ft^3/lb	Enthalpy Btu/lb
Entering Air	82.20	68.20	61.22	49.17	81.0	13.94	32.43
Precool	73.60	65.47	61.22	65.31	81.0	13.72	30.32
LATcc w/o TRAHP™	53.60	52.50	51.65	93.20	57.0	13.13	21.70
LATcc with TRAHP™	49.10	48.75	48.44	97.63	50.5	13.00	19.59
Free TRAHP™ Reheat	57.54	52.44	48.44	71.64	50.5	13.21	21.64

Process Data

Definitions:
Precool: Air leaving precool section of the TRAHP™
LAT w/o TRAHP™: Air temperature leaving coiling coil without TRAHP™
LAT w/ TRAHP™: Improved air temperature with TRAHP™
Free TRAHP™ Reheat: Reheated air temperature after the TRAHP™

Sensible Cooling
- Starting State Point: Entering Air Temperature
- Ending State Point: Precool
- Data: 161,386 Btu/hr cooling (variable)

Sensible Heating
- Starting State Point: LATcc with TRAHP™
- Ending State Point: Free TRAHP™ Reheat
- Data: 167,064 Btu/hr heating (variable)

Cooling with Dehumidification
- Starting State Point: Precool
- Ending State Point: LAT without TRAHP™
- Enthalpy difference: 8.62 Btu/lb; Refrigeration constant: 4.47
- Total cooling: 694,482 Btu/hr (57.9 tons); Moisture removal: 276.3 lb/hr

Cooling with Dehumidification
- Starting State Point: LATcc without TRAHP™
- Ending State Point: LATcc with TRAHP™
- Enthalpy difference: 2.10 Btu/lb; Refrigeration constant: 4.59
- Total cooling: 174,197 Btu/hr (14.5 tons); Moisture removal: 77.1 lb/hr

System Data: Air flow rate: 18,023 cfm

Coil data: Cooling coils: 1,030,065 Btu/hr Heating coils: 167,064 BTU/hr

Carolina Heat Pipe Inc.

"The Humidity Control Specialists"

Controlled Thermosyphon Run Around Heat Pipe (TRAHP) and Hot Gas Reheat -- Rooftop DX with 100% Outside Air

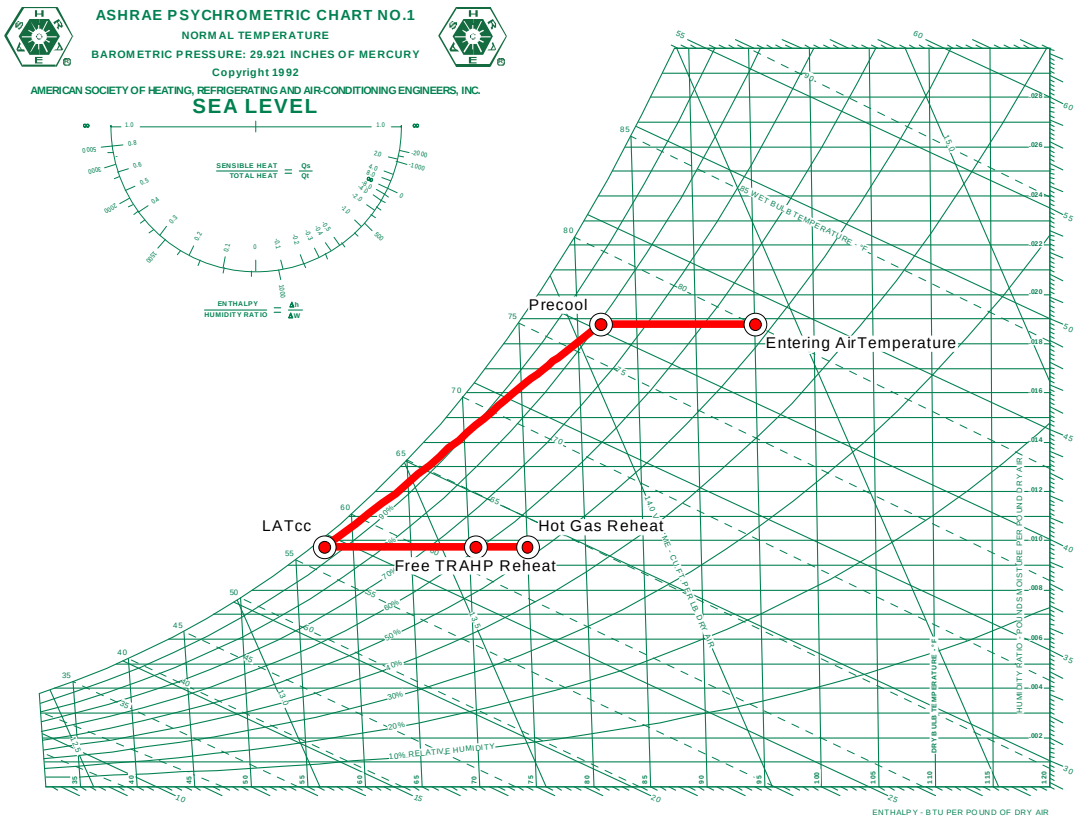

Carolina Heat Pipe Inc.

"The Humidity Control Specialists"

State Point Data

State Point	Dry Bulb °Fdb	Wet bulb °Fwb	Dew point °Fdp	Relative Humidity %Rh	Humidity Ratio grains/lb	Specific volume ft^3/lb	Enthalpy Btu/lb
Entering Air	95.00	80.00	74.93	52.54	131.1	14.43	43.46
Precool	81.90	76.75	74.93	79.45	131.1	14.09	40.20
LATcc	57.50	56.89	56.46	96.45	68.1	13.27	24.38
Free TRAHP™ Reheat	70.53	61.72	56.46	61.11	68.1	13.60	27.56
Hot Gas Reheat	75.00	63.27	56.46	52.57	68.1	13.72	28.65

Process Data

Sensible Cooling
- Starting State Point: Entering Air Temperature
- Ending State Point: Precool
- Data: 35,716 Btu/hr cooling (variable)

Cooling with Dehumidification
- Starting State Point: Precool
- Ending State Point: LAT without TRAHP™
- Enthalpy difference: 15.83 Btu/lb; Refrigeration constant: 4.39
- Total cooling: 187,452 Btu/hr (15.6 tons); Moisture removal: 106.5 lb/hr

Sensible Heating
- Starting State Point: LATcc
- Ending State Point: Free TRAHP™ Reheat
- Data: 37,724 Btu/hr heating (variable)

Sensible Heating
- Starting State Point: Free TRAHP™ Reheat
- Ending State Point: Hot Gas Reheat
- Data: 12,713 Btu/hr heating (variable)

Definitions:
Precool: Air leaving precool section of the TRAHP™
LATcc: Air temperature leaving coiling coil with TRAHP™
Free TRAHP™ Reheat: Reheated air temperature after the TRAHP™
Hot Gas Reheat: Temperature of the air due to waste reheat from hot condenser gas

System Data: Air flow rate: 2,700 cfm

Coil data: Cooling coils: 223,167 Btu/hr Heating coils: 50,436 BTU/hr

Carolina Heat Pipe Inc.

"The Humidity Control Specialists"

TRAHP™ DATA GUIDE SHEET

Project name: _____ **Job Site:** _____

❑ **Factory installation** **Company:** _____
OR **Point of contact:** _____
❑ **Field installation** **Phone:** _____ **Fax:** _____

Project status: ❑ **In design/Pre-Bid** ❑ **Bid and Spec** ❑ **Design/Build**

Being quoted to:
❑ **Owner** ❑ **Contractor** ❑ **HVAC equipment manufacturer** ❑ **Other**

Estimated job start date: _____

Design Engineer: _____ **Phone:** _____

Design conditions
Unit CFM: _____ **Percent Outside Air:** _____% **or** _____**CFM**
Outside Air: ___/___ °**F,DB/WB**
Entering Air: ___/___ °**F,DB/WB**
Leaving air, cooling coil: ___/___ °**F,DB/WB** ***(without TRAHP)***
Space Conditions: / °**F.DB/WB**

Air Handler or RTU information
Manufacturer: _____ **Model number:** _____
Tons: _____

Cooling coil data:
❑ **Chilled Water** ❑ **Direct Expansion**

Capacity(Mbtuh): _____ **Latent** _____ **Sensible** _____ **Total**

Fin material: ❑ **Copper** ❑ **Aluminum**

❑ **Performance sheet attached** ❑ **Selection sheet attached**
❑ **Mechanical schedule and specs from project drawings attached**
IF ABOVE IS NOT AVAILABLE:
❑ **Fill in dimensional data on next data sheet**

Comments and additional information:
_____
_____
_____

109 Wappoo Creek Drive, Suite 4B Charleston, SC 29412 ph: 843.795.9965 fax: 843.795.9757
www.carolinaheatpipe.com

Carolina Heat Pipe Inc.

"The Humidity Control Specialists"

TRAHP™ DATA GUIDE SHEET

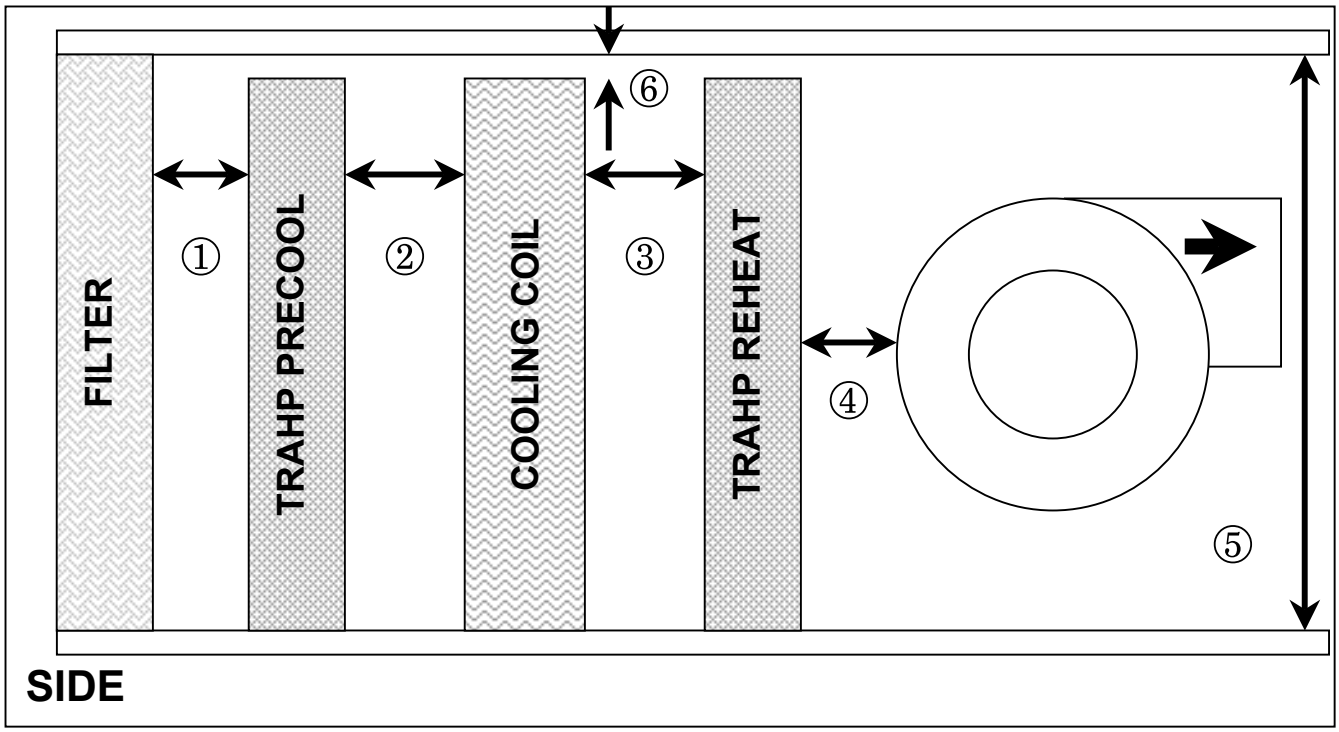

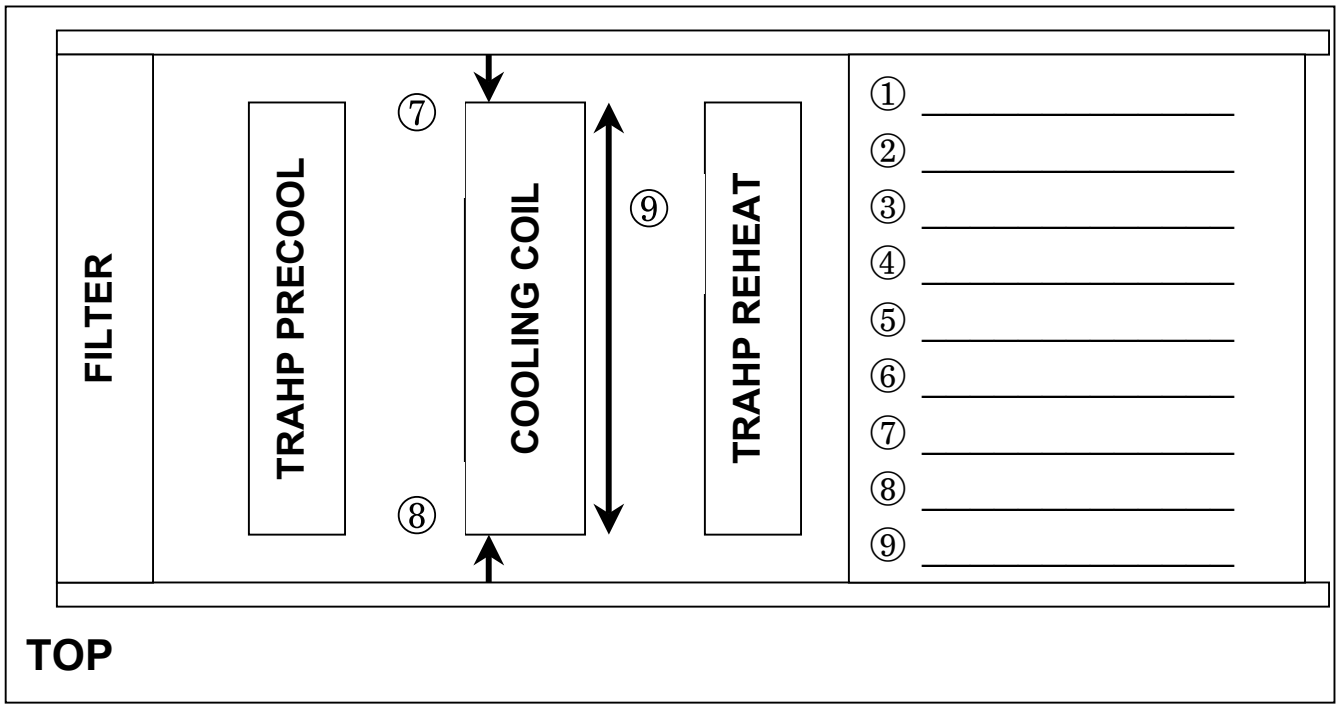

109 Wappoo Creek Drive, Suite 4B Charleston, SC 29412 ph: 843.795.9965 fax: 843.795.9757
www.carolinaheatpipe.com

Carolina Heat Pipe Inc.

"The Humidity Control Specialists"

DEHUMIDIFICATION
With
Controllable Hot Gas Reheat

Carolina Heat Pipe's Hot Gas Reheat System provides ***Controllable*** Hot Gas Reheat to increase the latent cooling capacity of an air conditioning system. The system is activated by a controller that allows hot gas from the compressor to flow into the Hot Gas Reheat Coil located downstream of the evaporator. For many packaged units, the reheat is t controlled by a single solenoid valve with on/off control to provide the required reheat from the compressor to improve dehumidification. Please note, most air conditioning units and heat pumps are designed to be temperature controlled. The Hot Gas Reheat System should only be activated during the cooling mode, NOT the heating mode. When the Hot Gas Reheat is activated, the supply air relative humidity is lowered to increase the dehumidification performance by allowing the unit to remove more moisture. This results in the unit running longer to satisfy the cooling load. If the space temperature cannot be maintained during the dehumidification process, then the HGRH Solenoid valve must be deactivated to allow maximum cooling.

Typically, the passive reheat saves 1KW per ton cooling over other means of reheat, such as terminal strip heat.

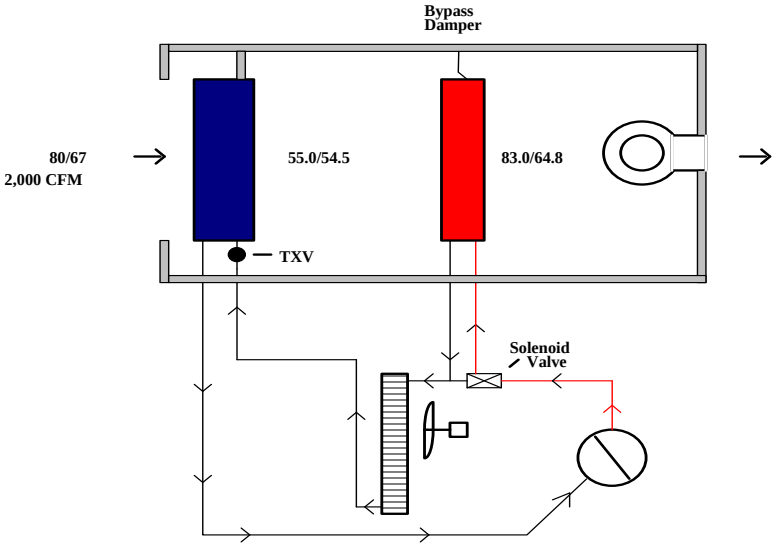

Hot Gas Reheat

Features

- *Humidity Control*
- *Part Load Performance*
- *Energy Efficiency*
- *Controllable Reheat*
- *Passive Reheat*

Dehumidification
With
Controllable Hot Gas Reheat:
Suggested Sequence of Control

Call for cooling:

On temperature rise, compressor #1 is energized; if temperature continues to rise, compressor #2 is energized. As space temperature is satisfied, this sequence is reversed.

Call for dehumidification:

If humidity rises above Setpoint and there is no cooling call, compressor #1 is energized and the Hot Gas Reheat Solenoid is opened. For a two-compressor unit, both compressors may be required to ensure the evaporator coil is removing moisture while the HGRH coil is raising the supply air temperature. When the call for dehumidification is satisfied, the Hot Gas Reheat solenoids can be de-energized.

During dehumidification, the room thermostat will run the air conditioner longer to reduce humidity due to load from the HGRH coil and may be permitted to lower the temperature setpoint by 1 to 2 degrees below the cooling temperature setting. However, if the cooling temperature drops below this, the compressor must be stopped and the HGRH solenoid closed. The supply fan should also be stopped to prevent reintroducing moisture from the cooling coil.

Please note: Dehumidification only occurs when the compressors are running. The hot gas diverted from the condenser is an energy efficient method of reheating the supply air leaving the evaporator to provide air entering the duct at a lower relative humidity.

Call for heating

Cooling and dehumidifying hot gas reheat are locked out until the call for heating is satisfied.

Piping For Hot Gas Reheat Coil

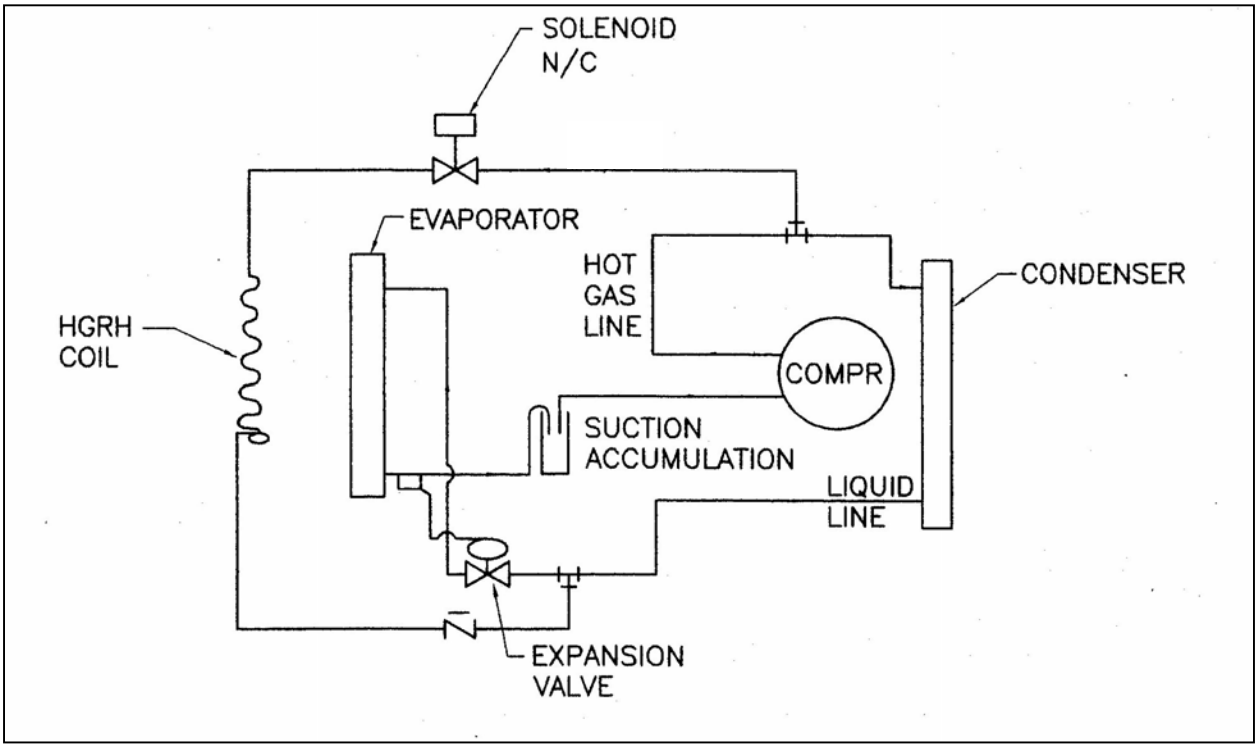

Typical Control Wiring

For On / Off Valve

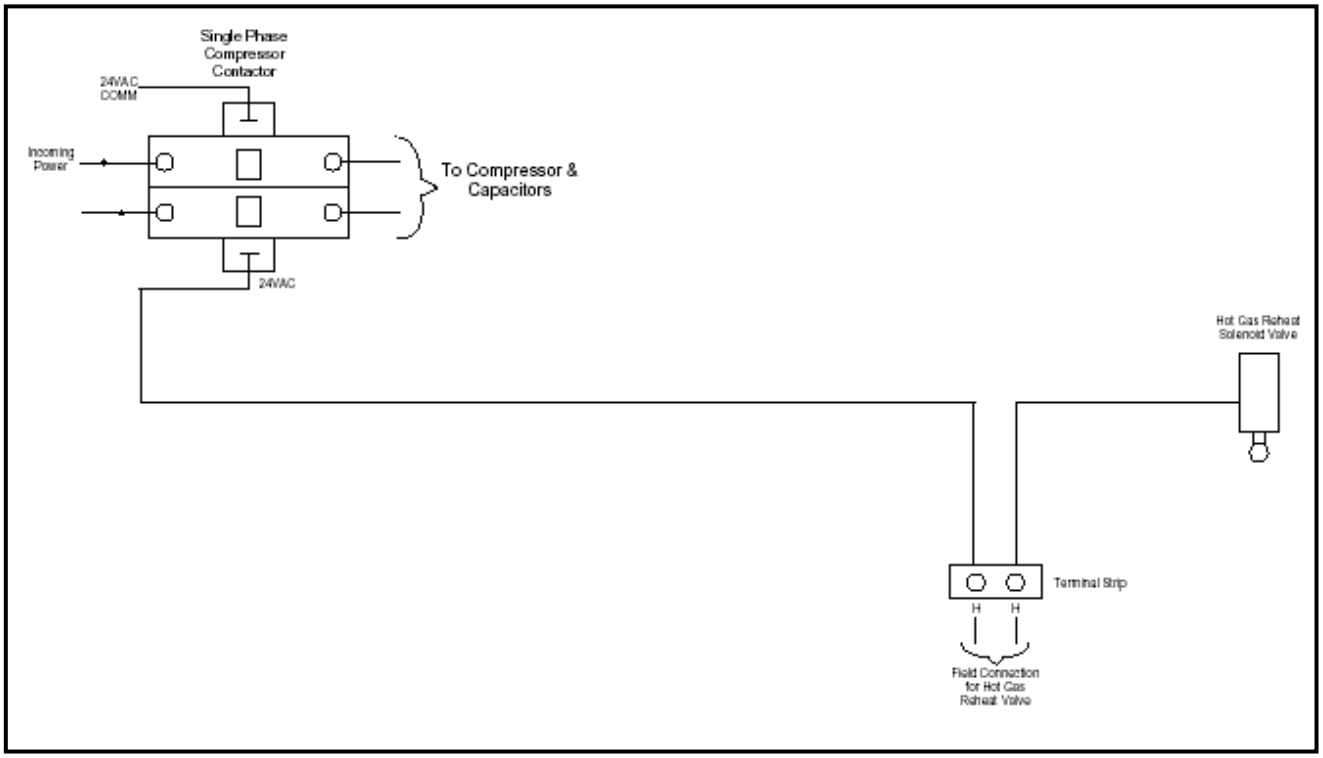

Carolina Heat Pipe On / Off Wiring and Control System

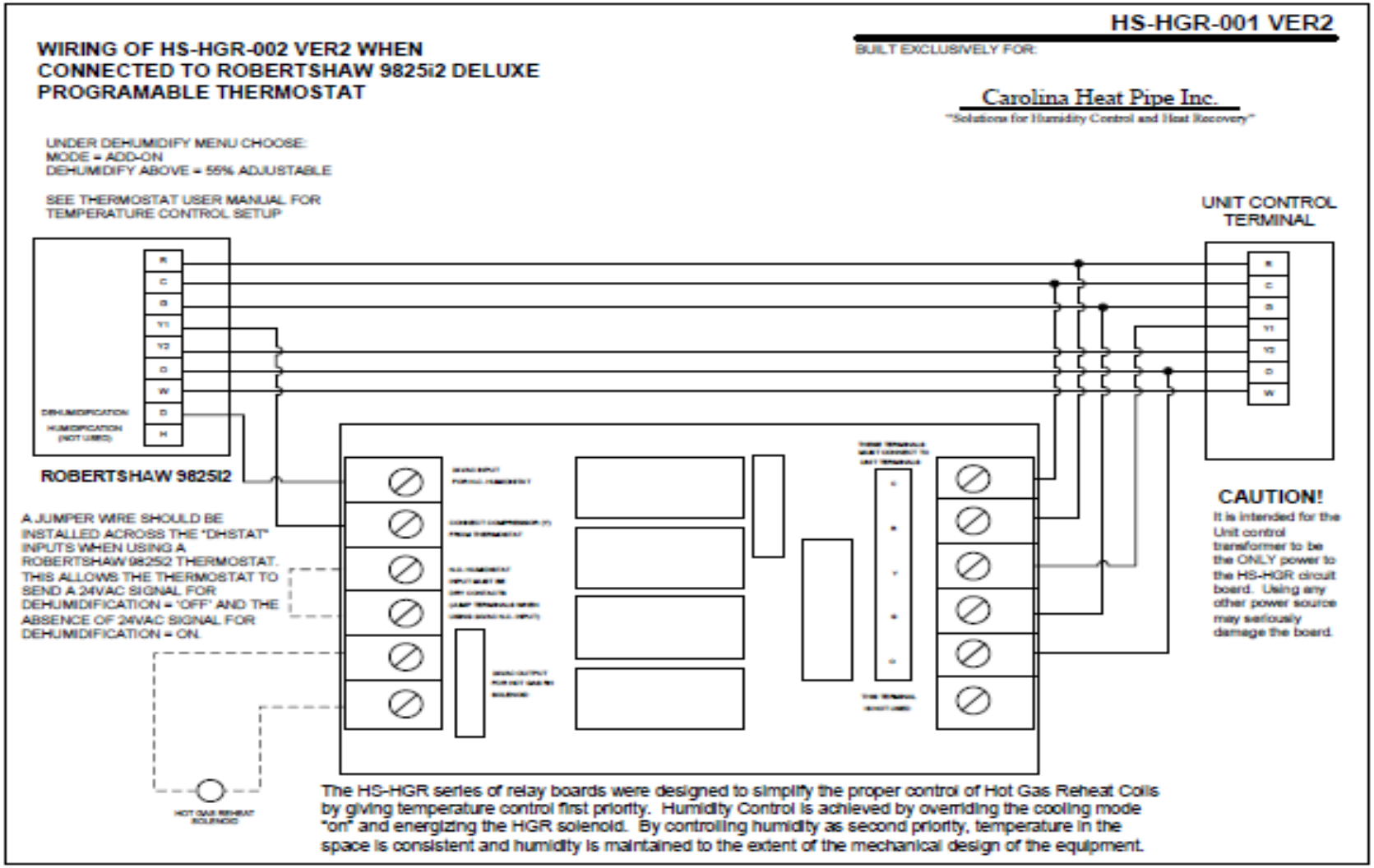

HS-HGR-001 VER2

BUILT EXCLUSIVELY FOR:

Carolina Heat Pipe Inc.

"Solutions for Humidity Control and Heat Recovery"

The HS-HGR series of relay boards were designed to simplify the proper control of Hot Gas Reheat Coils by giving temperature control first priority. Humidity Control is achieved by overriding the cooling mode "on" and energizing the HGR solenoid. By controlling humidity as second priority, temperature in the space is consistent and humidity is maintained to the extent of the mechanical design of the equipment.

CAUTION!

It is intended for the Unit control transformer to be the ONLY power to the HS-HGR circuit board. Using any other power source may seriously damage the board.

FOR N.C. DRY CONTACT CONTROL, SIMPLY RUN 24VAC THROUGH A NORMALY CLOSED SET OF CONTACTS AND TERMINATE TO THE "24VAC/N.C." TERMINAL.

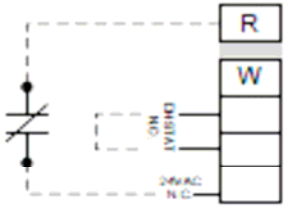

WHEN USING A SEPARATE DEHUMIDISTAT PLEASE FOLLOW THE WIRING GUIDES DETAILED HERE. NO EXTERNAL VOLTAGES ARE NEEDED. 24VAC IS TAKEN FROM THE BOARD THROUGH THE DEHUMIDISTAT CONTACTS AND BACK TO THE BOARD.

FOR N.O. DRY CONTACT CONTROL, CONNECT N.O. DEHUMIDISTAT TO "DHSTAT/N.O." TERMINALS WITH NO CONNECTION TO 24VAC/N.C.

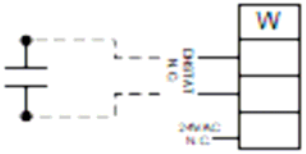

Caution: The circuit board is designed for 24VAC. Voltages exceeding 24VAC MAY damage the components of the board. Make sure that external voltage sources are isolated through the use of relays if necessary.

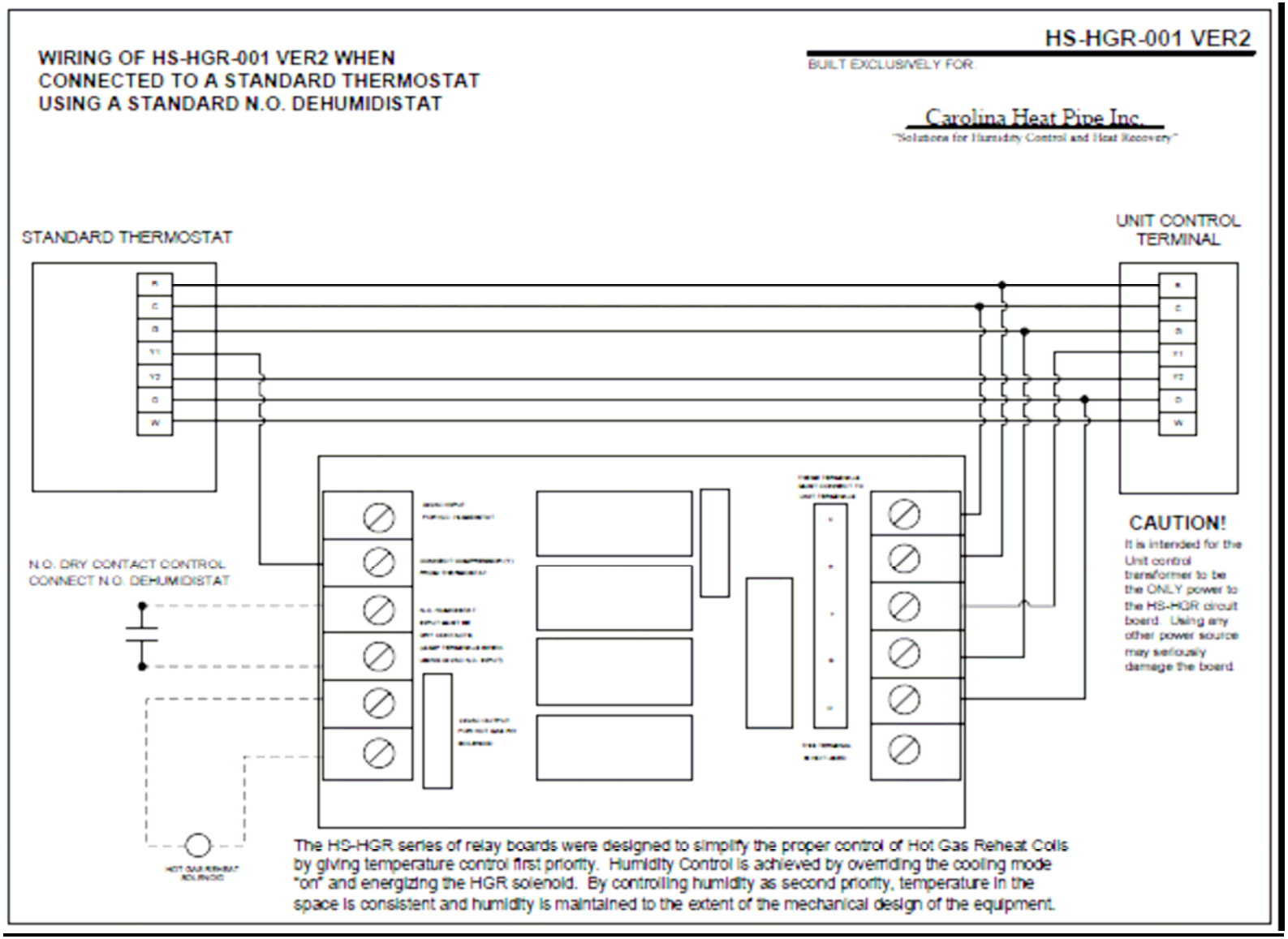
WIRING OF HS-HGR-001 VER2 WHEN
CONNECTED TO A STANDARD THERMOSTAT
USING A STANDARD N.O. DEHUMIDISTAT
HS-HGR-001 VER2
BUILT EXCLUSIVELY FOR:
Carolina Heat Pipe Inc.
"Solutions for Humidity Control and Heat Recovery"
STANDARD THERMOSTAT
UNIT CONTROL TERMINAL
N.O. DRY CONTACT CONTROL
CONNECT N.O. DEHUMIDISTAT
CAUTION!
It is intended for the Unit control transformer to be the ONLY power to the HS-HGR circuit board. Using any other power source may seriously damage the board.
The HS-HGR series of relay boards were designed to simplify the proper control of Hot Gas Reheat Coils by giving temperature control first priority. Humidity Control is achieved by overriding the cooling mode "on" and energizing the HGR solenoid. By controlling humidity as second priority, temperature in the space is consistent and humidity is maintained to the extent of the mechanical design of the equipment.

Carolina Heat Pipe Inc.

"The Humidity Control Specialists"

Carolina Heat Pipe Sporlan Modulating Valve Wiring Diagram

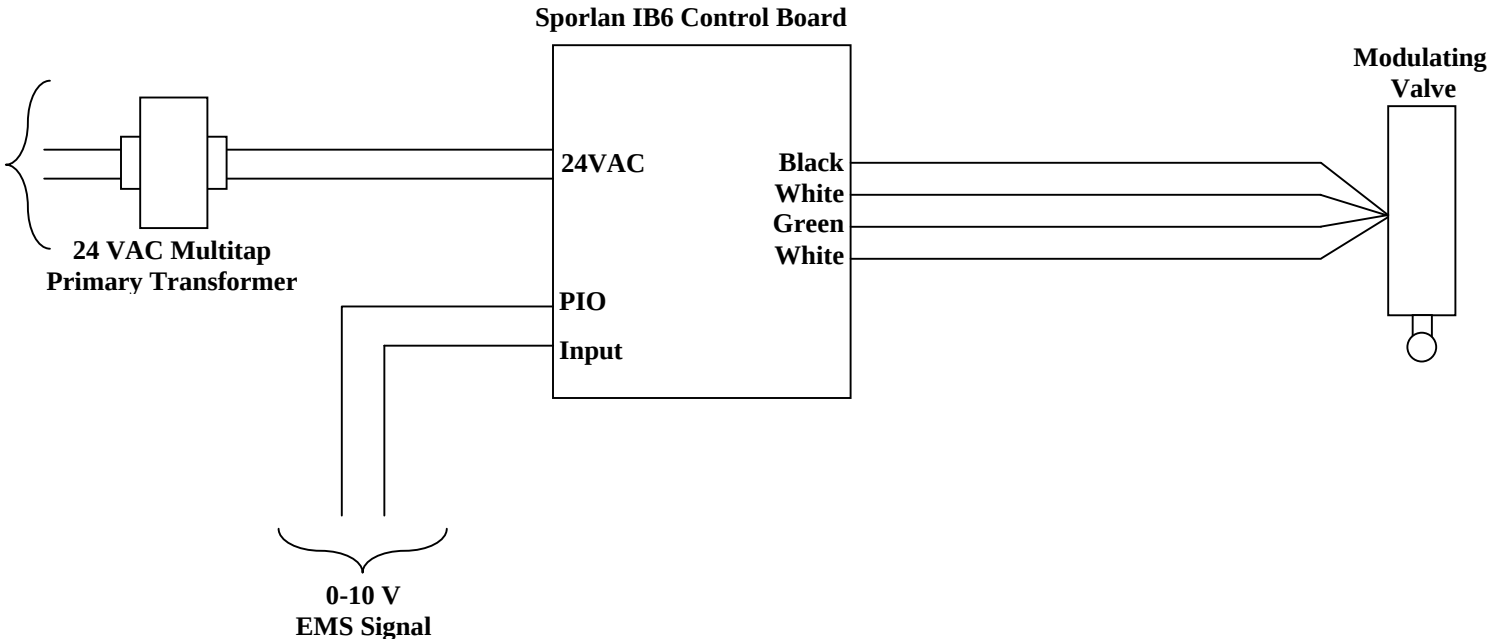

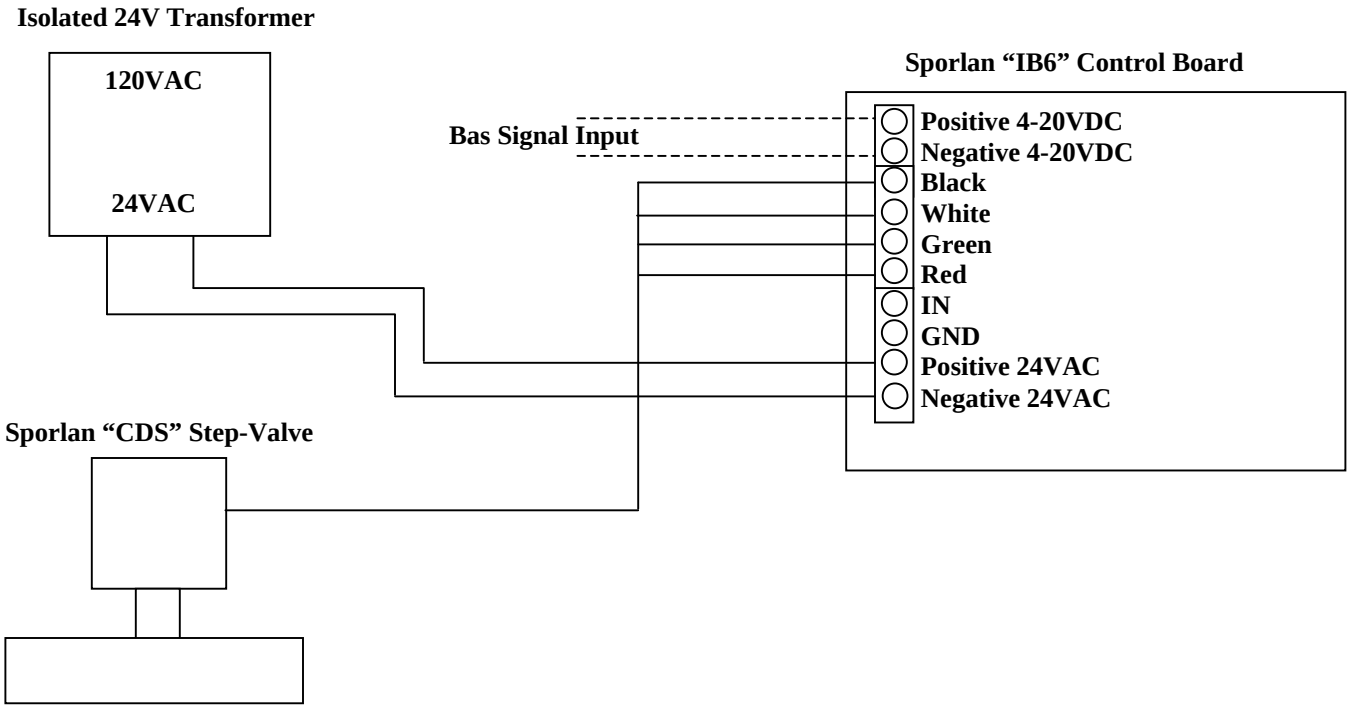

ACTION Psychrometrics□□ August 26, 2010

Psychrometric Chart
for Altitude 50 feet
Pressure: 29.87 in. Hg
Sample 3 ton unit
15% OA + HGRH

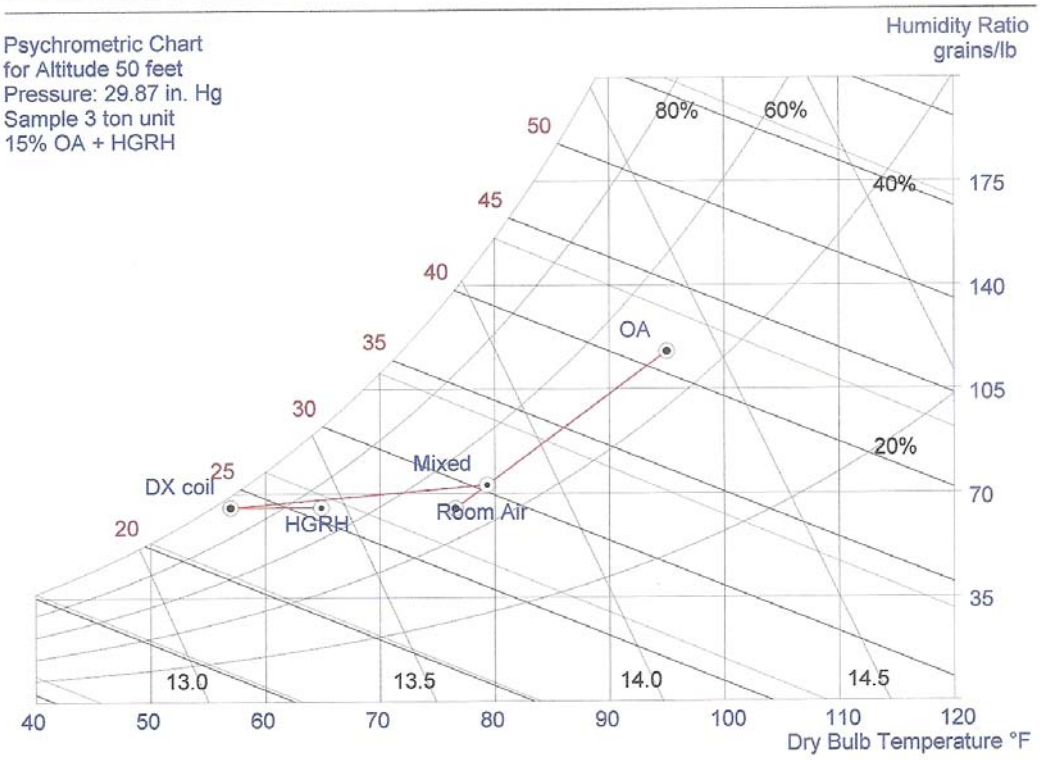

State Point Data

State Point	Dry Bulb °Fdb	Wet Bulb °Fwb	Dew Point °Fdp	Relative Humidity %RH	Humidity Ratio grains/lb	Specific Volume ft³/lb	Enthalpy Btu/lb
Room Air	76.59	63.13	55.15	47.55	64.9	13.75	28.54
OA	95.00	78.00	71.79	47.29	117.7	14.39	41.34
Mixed	79.35	65.69	58.28	48.61	72.9	13.84	30.45
DX coil	57.00	56.00	55.30	94.16	65.3	13.25	23.81
HGRH	64.89	59.03	55.30	71.18	65.3	13.45	25.74

Process Data

Mixed Air
- Starting State Point: OA
- Ending State Point: Room Air
- Mix Air State Point: Mixed

Cooling w/Dehumidification
- Starting State Point: Mixed
- Ending State Point: DX coil
- Enthalpy difference: 6.64 Btu/lb; Refrigeration constant: 4.43
- Total cooling: 35,286 Btu/h (2.9 tons); Moisture removal: 5.7 lb/h

Sensible Heating
- Starting State Point: DX coil
- Ending State Point: HGRH
- Data: 10,211 Btu/h heating (variable)

System Data

System air flow rate: 1,200 cfm

Dehumidification with a Roof Top Unit modified by Carolina Heat Pipe Using Hot Gas Reheat

1.0 General

1.1 In addition to the standard Roof Top Unit specification, provide a Roof Top Unit modified by Carolina Heat Pipe, Inc. to include Controllable Hot Gas Reheat.

2.0 Hot Gas Reheat System

2.1 Carolina Heat Pipe's Hot Gas Reheat System will provide Controllable Hot Gas Reheat. When the system is activated, a controller shall allow hot gas from the compressor to flow into the Hot Gas Reheat Coil located downstream of the evaporator coil.

2.2 The reheat capacity shall be controlled one of two ways

1) A stepper control valve can modulate the hot gas from the compressor to flow into the Hot Gas Reheat Coil located downstream of the evaporator. The reheat capacity is controlled by a signal from a sensor or a DDC system.

2) A single solenoid valve with on/off control to provide the required reheat from the lead compressor as needed for dehumidification. For this application a special circuit control board (HS-HGR) may be specified when a DDC system is not available to provide the interface between the unit and the controlling humidistat

Carolina Heat Pipe Inc.

"The Humidity Control Specialists"

Heat Recovery Thermosyphon Run Around Heat Pipe (TRAHP™) Schematic

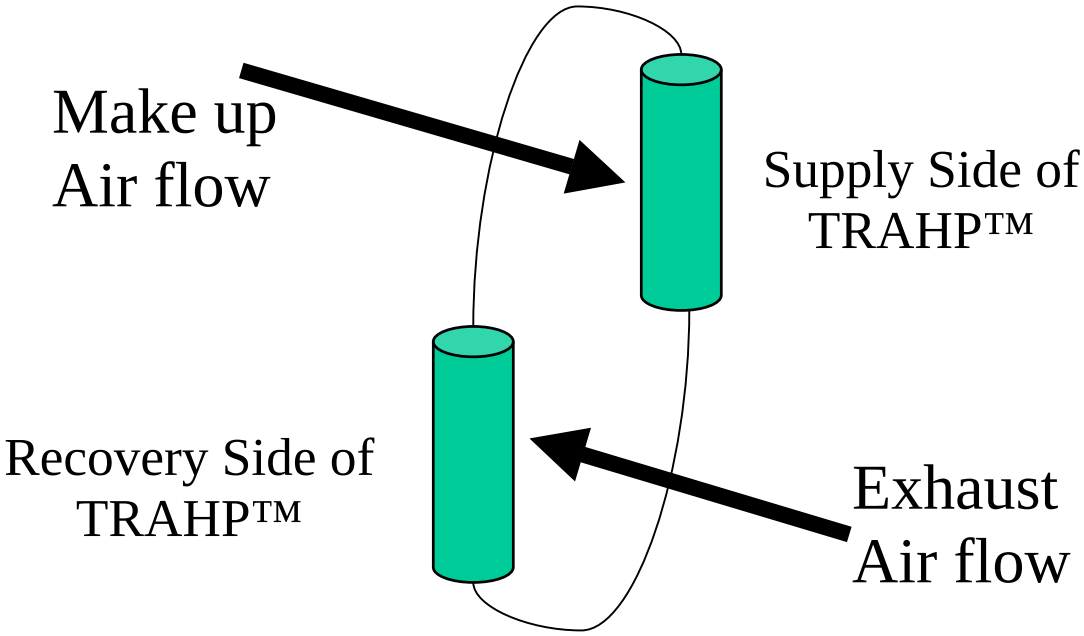

Note: Please contact us for your specific application needs regarding air stream location, heat transfer required, energy savings resulting from application, etc.

Carolina Heat Pipe Inc.

"The Humidity Control Specialists"

Split System Heat Recovery TRAHP™

Carolina Heat Pipe Patented Split System TRAHP™ (Thermosyphon Run Around Heat Pipe) heat transfer concept brings a new capability to the use of Heat Pipe Science for Energy Recovery. By consolidating the performance of multiple heat pipes with interconnecting run around headers, Carolina Heat Pipe Inc. can transfer heat without location restrictions imposed by conventional heat pipe systems. This TRAHP™ development allows us to provide SPLIT SYSTEM HEAT PIPES for incorporating heating, ventilating and air conditioning systems. Now a system designer can stretch the heat pipe transfer surfaces, turn heat pipe surfaces, or separate these heat transfer surfaces several feet to strategically place them where wanted. This new development ELIMINATES earlier conventional heat pipe placement restrictions for multiple bent heat pipes or side-by-side air duct locations. Also because split system TRAHP™ heat transfer surfaces are separated by refrigerant charged headers, the heat transfer process can be controlled with an on-off signal or a modulating signal from a modern control system.

Duct Air Flow Arrangement

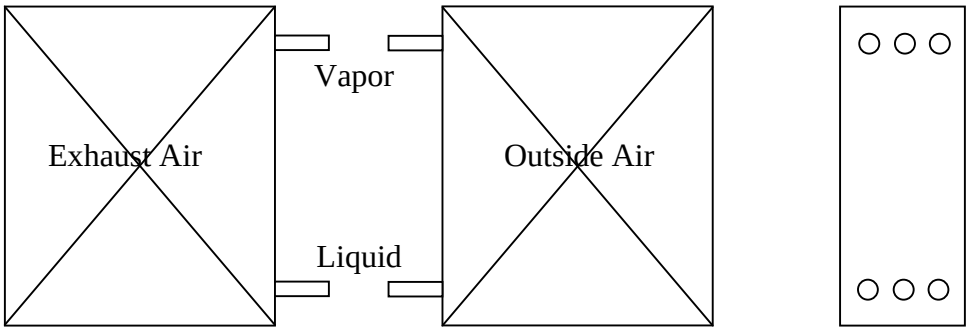

Piping Arrangement Plan View

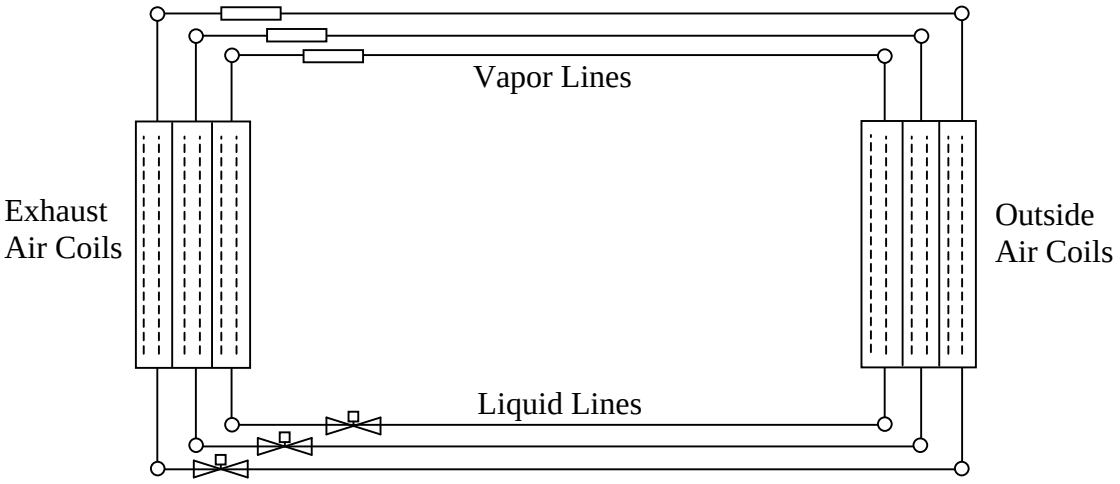

Carolina Heat Pipe Inc.

"The Humidity Control Specialists"

Arrangement and Photo
For
Split System Heat Recovery TRAHP™

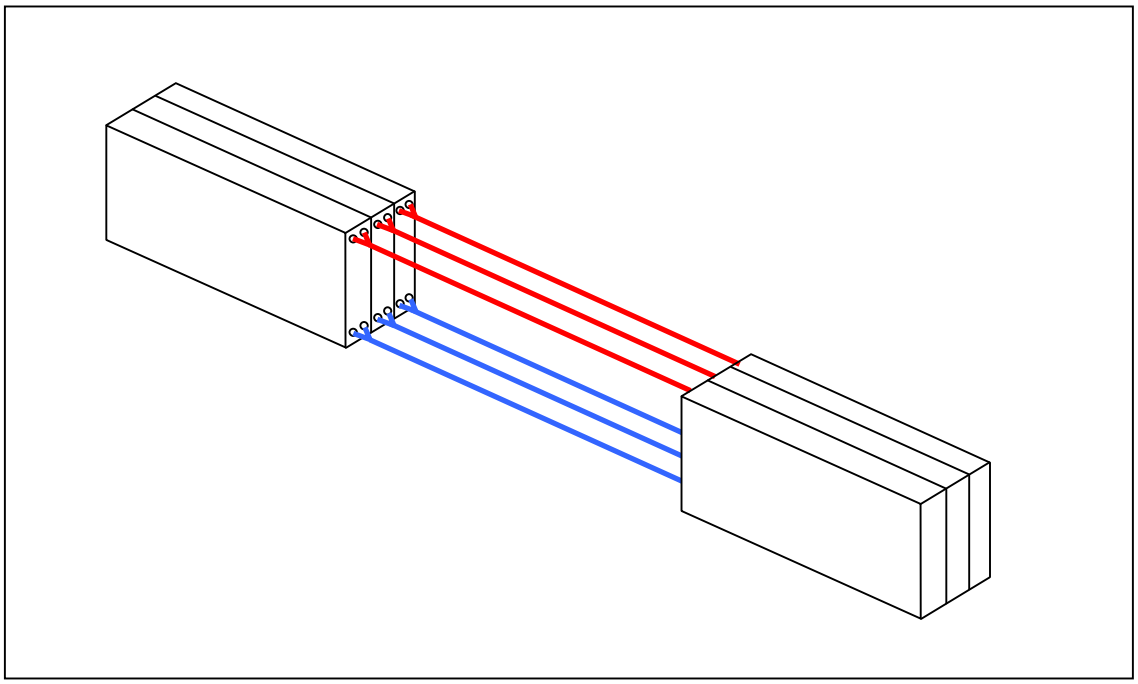

Carolina Heat Pipe Inc.

"The Humidity Control Specialists"

ENERGY ANALYSIS
FOR
HEAT RECOVERY
THERMOSYPHON RUN AROUND HEAT PIPE (TRAHP™)

MODEL HR MACH 1

WEATHER DATA: National Climatic Data Center (NCDC)
LOCATION: Charleston, SC
CFM: 5,000
EXHAUST TEMPERATURE: 75º F
HEAT PIPE EFFECTIVENESS: 0.38
HOURS OF OPERATION: 24 hours per day

Outside Air Bin Temp	Hours per year	TRAHP™ Heating BTUH	KW Equivalent	Therms per hour at 75% Efficiency	Annual Kwh	Annual Therms
50/54	649	47,196	13.8	0.63	8,956	409
45/49	572	57,456	16.8	0.77	9,610	440
40/44	444	67,716	19.8	0.90	8,791	400
35/39	329	77,976	22.8	1.04	7,501	342
30/34	196	88,236	25.8	1.18	5,057	231
25/29	83	98,496	28.8	1.31	2,390	109
20/24	24	108,756	31.9	1.45	766	35
15/19	4	119,016	34.9	1.59	140	6
10/14	0	0	0	0	0	0
5/9	0	0	0	0	0	0
0/4	0	0	0	0	0	0
				Total	43,211	1,972

DEMAND AND INSTALLED CAPACITY REDUCTION:

119,016 BTUH
34.9 KW
1.6 Therms per hour

Specification

Split System TRAHP™ Heat Recovery

1.1 Furnish, install, test, and place into service a **Split System TRAHP™ Heat Recovery** system, air-to-air heat exchanger to be manufactured by Carolina Heat Pipe, Inc.

1.2 The **Split System TRAHP™ Heat Recovery** Heat Pipe Loop will transfer heat between the air (outside) entering duct and the exhaust air duct without any cross contamination using the heat pipe thermosyphon loop process of passive vapor mass transfer, without the use of any pumps, compressors or other means of moving the working fluid.

1.3 Each **Split System TRAHP™ Heat Recovery** section shall be installed in an insulated and drainable enclosure suitable for incorporation into a ducted air stream. The **Split System TRAHP™ Heat Recovery l**oop shall be capable of operating at temperatures ranging from –80F to 130F.

1.4 The **Split System TRAHP™ Heat Recovery** Sections shall be made ready for field installation by Carolina Heat Pipe Inc. Actual field installation and final charging shall be by Carolina Heat Pipe, Inc. or by factory certified technicians.

1.5 Carolina Heat Pipe will provide a five-year warranty on the performance of the **Split System TRAHP™ Heat Recovery** Loop.

2.1 The final circuiting and working fluid charge of the **Split System TRAHP™ Heat Recovery** will be determined by Carolina Heat Pipe Engineers to meet or exceed the specified performance.

2.2 The **Split System TRAHP™ Heat Recovery** Loop shall be constructed of seamless copper tubing which is permanently expanded into aluminum or copper fins to form a rigid and complete metal to metal contact between the copper tube and the fin collar at all operating conditions. Special corrosion resistant coatings may be applied when so specified

2.3 The **Split System TRAHP™ Heat Recovery** working fluid shall conform to Group I of the American National Safety Code for Mechanical Refrigeration unless otherwise specified.

2.4 The **Split System TRAHP™ Heat Recovery** Loop shall be controllable as specified to respond to an owner provided control signal by means one control device, located in the interconnecting vapor line, for each increment of 75,000 BTUH of heat transfer.

TRAHP™ Module diagram.

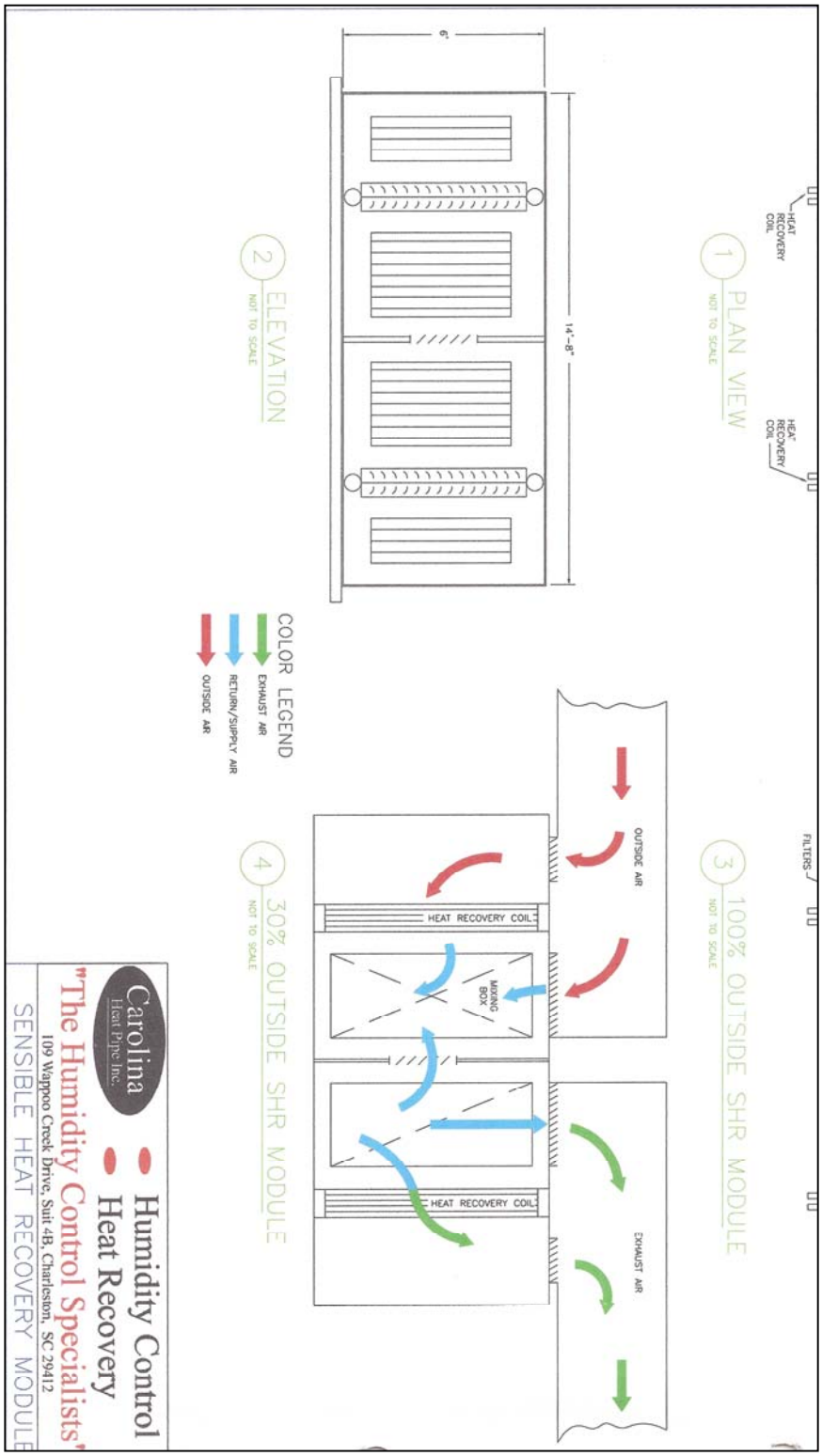

Specification for SHR TRAHP™ Module

1.1 Furnish a Sensible Heat Recovery (SHR)TRAHP™ Module for air-to-air heat exchanger to be manufactured by Carolina Heat Pipe, Inc.

1.2 The SHR TRAHP™ Module will transfer heat between the air (outside) entering the duct and the exhaust air duct without any cross contamination using the heat pipe thermosyphon loop process of passive vapor mass transfer, without the use of any pumps, compressors or other mechanical means of moving the working fluid.

1.3 Each SHR TRAHP™ Module section shall be provided in an insulated and drainable enclosure suitable for incorporation into a ducted air stream. The SHR TRAHP™ Module shall be capable of operating at temperatures ranging from -80F to 130F.

1.4 The SHR TRAHP™ Module shall be provided ready for field installation.

1.5 Carolina Heat Pipe will provide a five-year warranty on the performance of the SHR TRAHP™ Module.

2.1 The SHR TRAHP™ Module heat transfer surfaces shall be constructed of seamless copper tubing permanently expanded into aluminum or copper fins to form a rigid and complete metal to metal contact between the copper tube and the fin collar at all operating conditions. Special corrosion resistant coatings may be applied when so specified.

2.2 The SHR TRAHP™ Module working fluid shall conform to Group I of the American National Safety Code for Mechanical Refrigeration unless otherwise specified.

2.3 The SHR TRAHP™ Module shall be controllable as specified to respond to an owner provided control signal.

2.4 The TRAHP™ heat transfer surfaces shall have vertical tubes with upper and lower headers to allow a minimum of liquid and vapor connecting lines between the precool and reheat tubes. One control valve shall be provided to control two (2) rows of heat transfer surfaces.

2.5 The SHR TRAHP™ Module shall have modulating valves unless otherwise specified.

2.6 Controllability Option: The SHR TRAHP™ shall have the capability of Controlling the heat transfer capacity by variable heat transfer between 0 and 100%. Control shall be accomplished by sending a single proportional control signal (0-10 VDC or 4-20 MA) to the installed modulating valves from the BAS.

Carolina Heat Pipe Inc.

"The Humidity Control Specialists"

HEAT RECOVERY HEAT PIPE DATA GUIDE SHEET

Project name: _____ **Job Site:** _____

❑ **Factory installation** **Company:** _____
OR **Point of contact:** _____
❑ **Field installation** **Phone:** _____ **Fax:** _____

Project status: ❑ **In design/Pre-Bid** ❑ **Bid and Spec** ❑ **Design/Build**

Being quoted to:
❑ **Owner** ❑ **Contractor** ❑ **HVAC equipment manufacturer** ❑ **Other**

Estimated job start date: _____

Design Engineer: _____ **Phone:** _____

Design conditions
Unit CFM: _____ **Percent Outside Air:** _____% **or** _____**CFM**
Outside Air: ___/___ **°F,DB/WB**
Entering Air: ___/___ **°F,DB/WB**
Leaving air, cooling coil: ___/___ **°F,DB/WB** ***(without Heat Pipe)***
Space Conditions: / **°F.DB/WB**

Air Handler or RTU information
Manufacturer: _____ **Model number:** _____

Duct-to-Duct Configuration:

❑ **Mechanical schedule and specs from project drawings attached**
IF ABOVE IS NOT AVAILABLE:
❑ **Fill in dimensional data on next data sheet**

Any other Heat Recovery configurations:

Call Factory for Guidance
If Heat Recovery Heat Wheel is being used, CALL Factory for sensible heat recovery considerations.

Comments and additional information:
_____
_____
_____

109 Wappoo Creek Drive, Suite 4B Charleston, SC 29412 ph: 843.795.9965 fax: 843.795.9757
www.carolinaheatpipe.com

Carolina Heat Pipe Inc.

"The Humidity Control Specialists"

HEAT RECOVERY HEAT PIPE DATA GUIDE SHEET

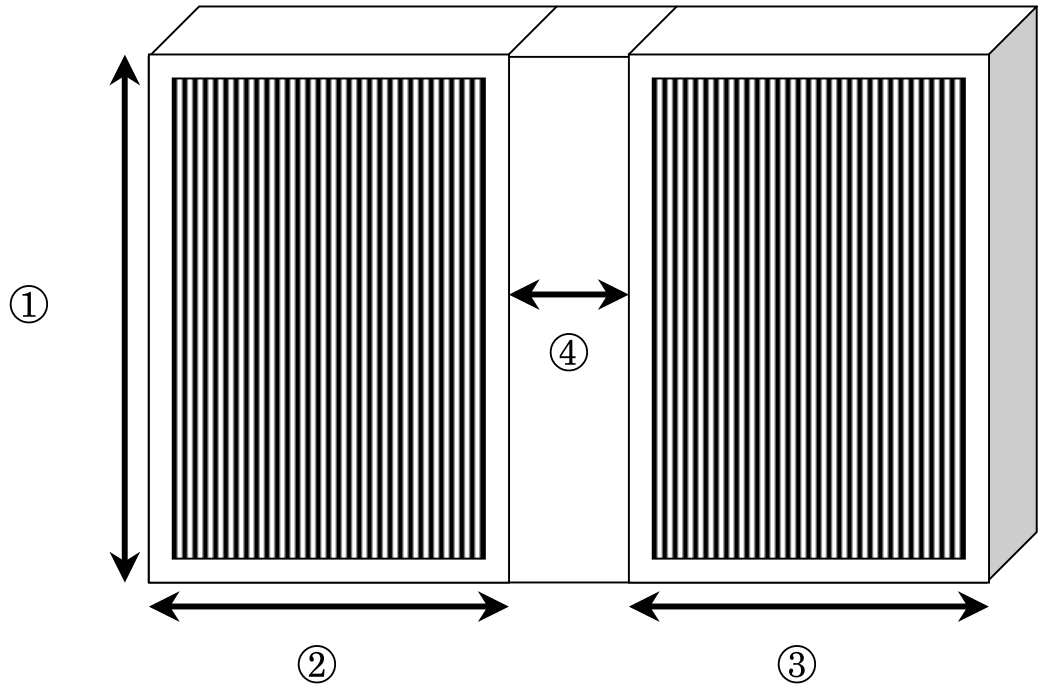

① _____ Height of Heat Recovery module
② _____ Width of one half of module
③ _____ Width of other half of module
④ _____ Split between ducts/modules

Comments and additional information:

_____
_____
_____
_____
_____
_____

109 Wappoo Creek Drive, Suite 4B Charleston, SC 29412 ph: 843.795.9965 fax: 843.795.9757
www.carolinaheatpipe.com

Carolina Heat Pipe Inc.

"The Humidity Control Specialists"

Customized Outside Air Supply Package Unit*

Typical 3000 CFM Equipment Arrangement:

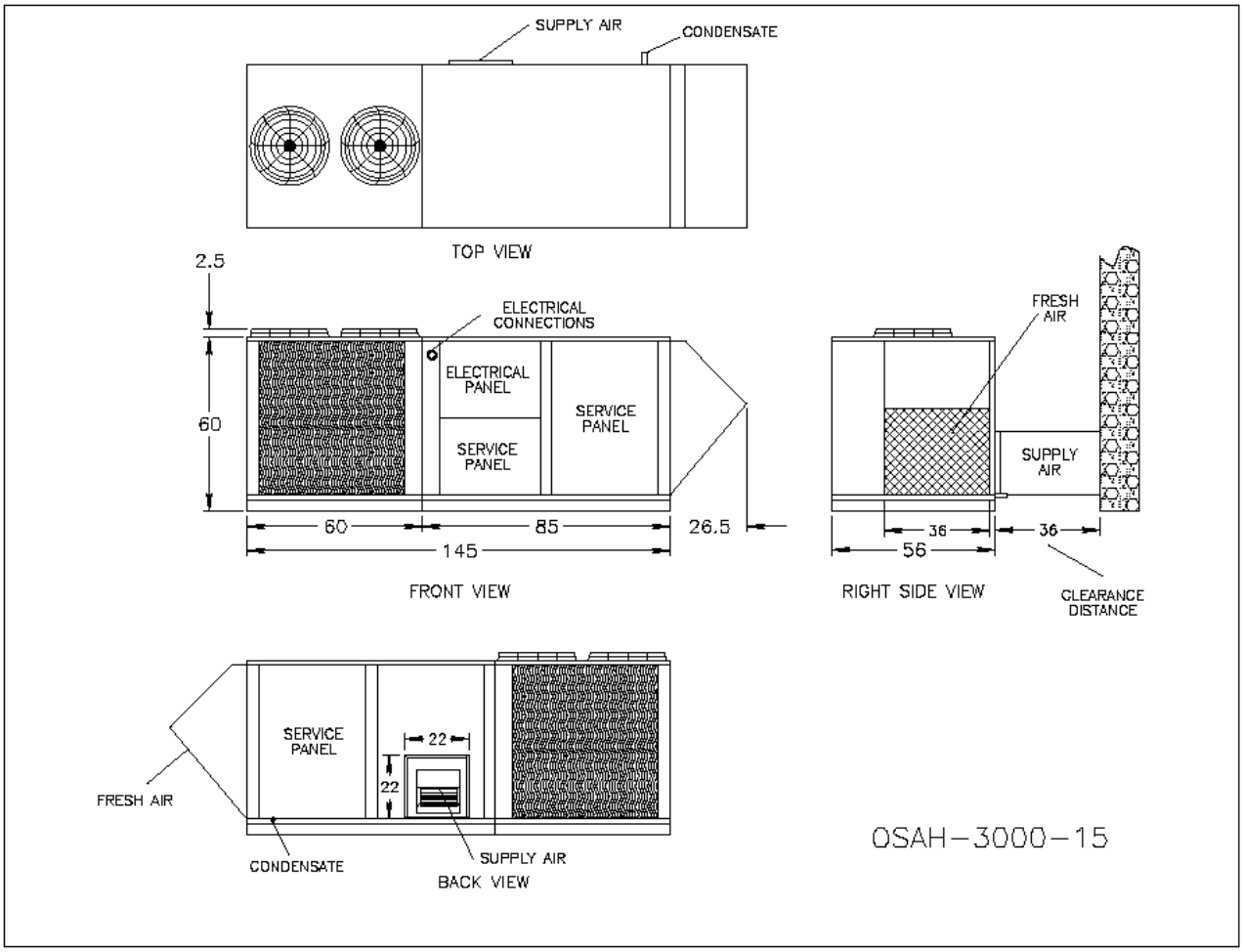

These units available as straight cooling or heat pump units with modern standard feature such as high efficiency scroll compressors and environmentally friendly refrigerant (R-410), microprocessor controls, and variable cabinet space to accommodate energy recovery and dehumidification systems.

*Unit to be manufactured by experienced customized air conditioning equipment manufacturer.

Carolina Heat Pipe Inc.

"The Humidity Control Specialists"

Customized Outside Air Supply Package Unit*

Typical Equipment Features Available:

- Space for energy efficient reheat options for supplying dehumidified air
- Fully programmable open-protocol microprocessor control package with factory installed sensors.
- Frame Sizes
  - 6, 7.5, 10 ton
  - 15, 20 ton
  - 25, 30 ton
  - 40, 50 ton
- Cabinet Options
  - Double wall construction
  - Cabinet material type 304
  - Cabinet material 316 stainless steel
  - Provision to upsize the supply blower for external static pressure
  - Provision for the customer to specify options that define the unit discharge as side discharge of down discharge
  - Other corrosion protection
- Dehumidification Options
  - CHP controllable thermosyphon heat pipe
  - Modulating hot gas reheat
  - Continuous liquid refrigerant subcool reheat
  - Evaporator coil bypass when outside air conditions permit
  - Combination of these techniques
- Coil Options
  - Corrosion coating of fin surfaces
  - Copper fins with stainless steel sheet metal

*Unit to be manufactured by experienced customized air conditioning equipment manufacturer.

Carolina Heat Pipe Inc.

"The Humidity Control Specialists"

Subcool Reheat of Refrigerant for Improved Dehumidification

A Passive Dehumidification System

Subcool Reheat of refrigerant for improved dehumidification is applicable to Direct Expansion Straight Cool and Heat Pumps in retrofit, renovations and new installations. The System involves introducing a special custom designed Subcool Reheat refrigerant coil in the air stream downstream of the evaporator coil and piping the liquid refrigerant from the condenser coil through this subcool coil and then on to the thermal expansion valve that supplies the evaporator coil.

Operating Principle: The Subcool Reheat of refrigerant for improved dehumidification uses the cold supply air to cool the liquid refrigerant before it enters the evaporator coil. This process is called "Subcooling" and is an acceptable practice in the industry. This process increases the moisture removal capability of the Air Conditioning System and passively reheats the supply air to introduce cool dryer air into a building. Properly installed a Subcool Reheat system will improve the moisture removal while lowering the relative humidity of the supply air served by an Air Conditioning System. The moisture removed automatically goes outside through the Air Conditioner's drain line. There are no buckets to empty.

Typical 20-Ton
Air-Conditioning System

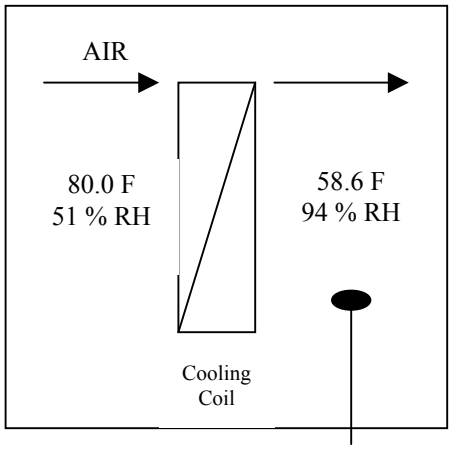

Cold Wet Air

Typical 20 Ton Air Conditioning
Air Conditioning System
With Subcool Reheat

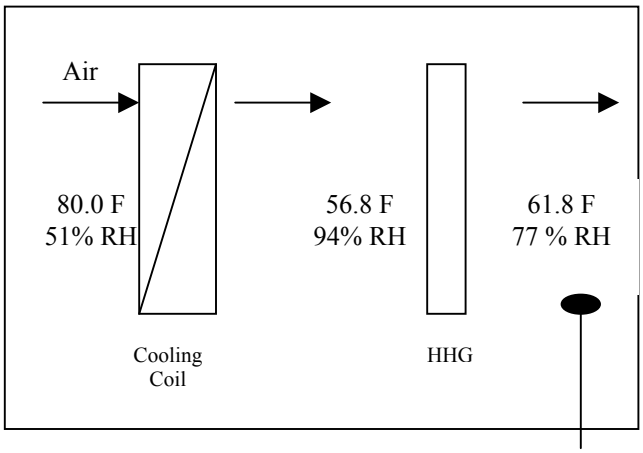

Cool Dryer Air

Moisture Removal: Increased often by 56% or more due to Subcool Reheat by changing the specific heat ratio (less cooling capacity but more moisture removal capacity)

A Subcool Reheat System Specification

1.0 General

1.1 Furnish, install, test and place into service a Carolina Heat Pipe Inc. provided Subcool Reheat system in each of the specified units. The Subcool Reheat coil is to be mounted in the supply air so as to subcool the liquid refrigerant in the liquid line before the refrigerant enters the evaporator through the thermostatic expansion valve.

1.2 The acceptable manufacturer is Carolina Heat Pipe, Inc., Charleston, SC. (843) 795-9965.

2.0 Performance

2.1 The Subcool Reheat system improves the dehumidification capability of an air conditioning system when the unit is running. However, in order to regulate both temperature and humidity this process should be used in conjunction with a controllable hot gas reheat system or a controllable thermosyphon heat pipe system. Such a system requires each air conditioning system or heat pump is equipped with a controller that is programmed to respond to both the temperature and humidity in the space being served.

3.0 Construction

3.1 The Subcool Reheat Heat Exchanger shall be constructed of seamless copper tubing permanently expanded into aluminum fins to form a firm, ridged and complete metal-to-metal pressure contact between the tube and fin collar at all operating conditions. Installation shall only be by a Carolina Heat Pipe Inc. certified contractor.

Carolina Heat Pipe Inc.

"The Humidity Control Specialists"

DEHUMIDIFICATION
With Combination of Subcool Reheat and *Controllable* Hot Gas Reheat

SIMPLE RELIABLE CONTROL

Carolina Heat Pipe's combination of Subcool Reheat and Controllable Hot Gas Reheat System provides energy efficient dehumidification improvement over straight hot gas reheat. This results in an increase in total cooling and dehumidification at the evaporator. Both sources of reheat are passive; however, the subcool reheat reduces the waste heat load or the hot gas reheat needed for proper dehumidification.

The subcool reheat is continuous, however, the reheat capacity is controlled in one of two ways:

1) ***A single solenoid valve with on/off control to provide the required reheat from the lead compressor as needed for dehumidification.***

2) ***A stepper control valve can modulate the hot gas from the compressor to flow into the Hot Gas Reheat Coil located downstream of the evaporator. The reheat capacity is controlled by a humidity sensor.***

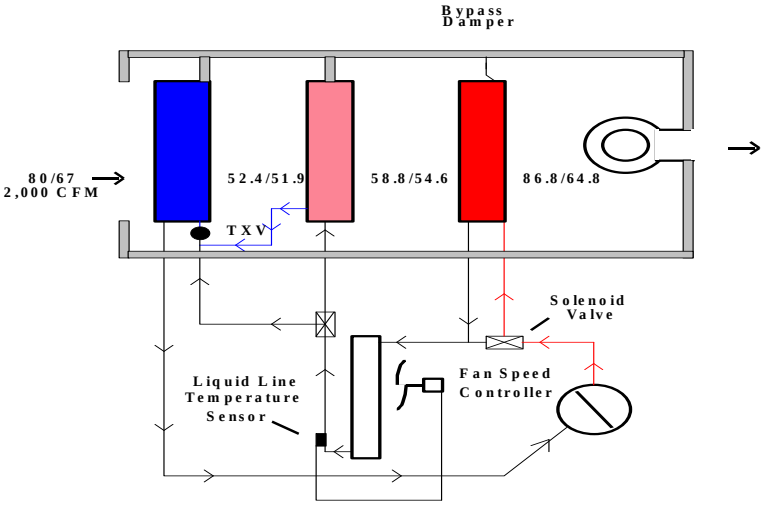

- Air can be discharged at a temperature between 54.4 and 89 F.
- At 75 F discharge, reheat is equal to 13 Kw.
- 7.6 tons total cooling; 28 lbs./hour moisture removal.

FEATURES

- ***Maximized Humidity Control***
- ***Minimized Capacity Reduction***
- ***Improved Part Load Performance***
- ***Improved Energy Efficiency Ratio***
- ***Controllable Passive Reheat***

Specification

Dehumidification with a Roof Top Unit modified by Carolina Heat Pipe using Hot Gas Reheat and Subcooling when required

1.0 General

1.1 In addition to the standard Roof Top Unit specification, provide a Roof Top Unit modified by Carolina Heat Pipe, Inc. to include continuous Subcool Reheat and Controllable Hot Gas Reheat.

2.0 Hot Gas Reheat System

2.1 Carolina Heat Pipe's Hot Gas Reheat System will provide Controllable Hot Gas Reheat. When the system is activated, a controller shall allow hot gas from the compressor to flow into the Hot Gas Reheat Coil located downstream of the evaporator coil.

2.2 The reheat capacity shall be controlled one of two ways

1) A stepper control valve can modulate the hot gas from the compressor to flow into the Hot Gas Reheat Coil located downstream of the evaporator. The reheat capacity is controlled by a signal from a sensor or a DDC system.

2) A single solenoid valve with on/off control to provide the required reheat from the lead compressor as needed for dehumidification. For this application a special circuit control board (HS-HGR) may be specified when a DDC system is not available to provide the interface between the unit and the controlling humidistat

3) 3.0 Subcool Reheat Coil

3.1 The Subcool Reheat Coil when specified shall increase the total cooling and dehumidification at the evaporator coil while providing free reheat.

Subcool and Hot Gas Reheat -- Rooftop DX with some Outside Air

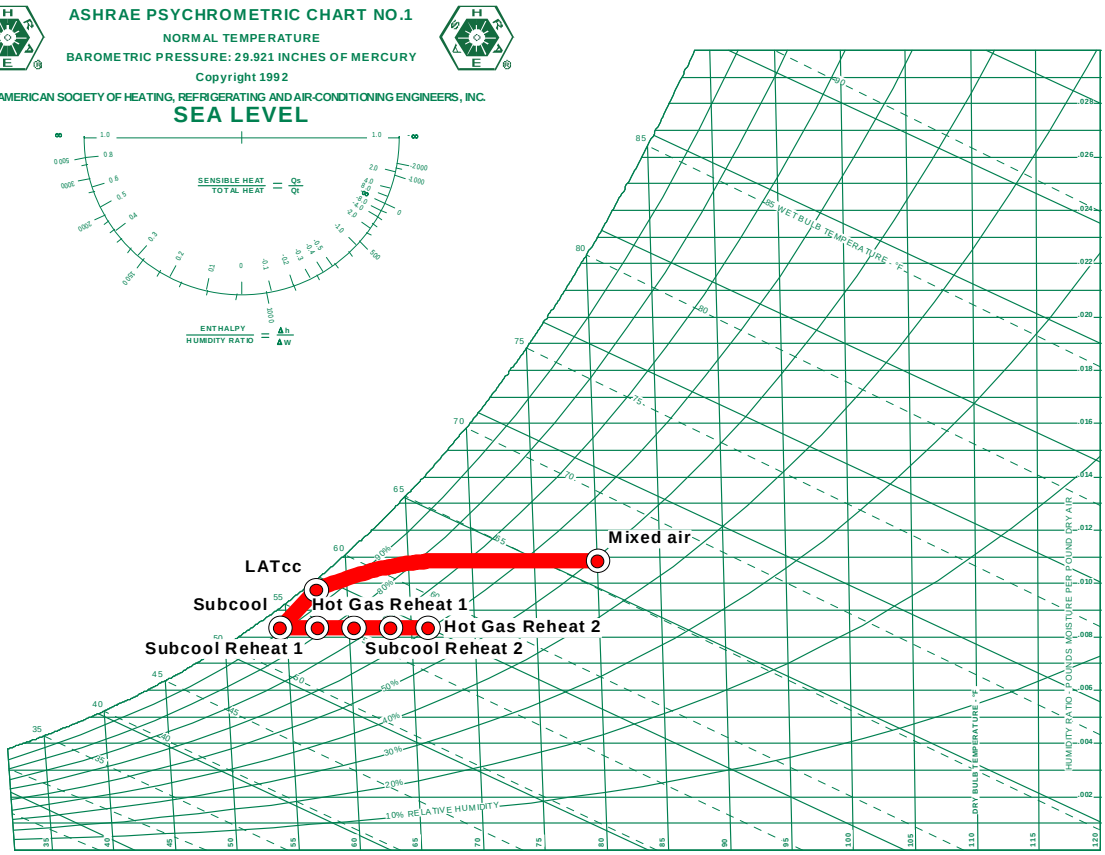

State Point Data

State Point	Dry Bulb °Fdb	Wet bulb °Fwb	Dew point °Fdp	Relative Humidity %Rh	Humidity Ratio grains/lb	Specific volume ft^3/lb	Enthalpy Btu/lb
Mixed Air	80.00	66.50	59.39	49.50	75.8	13.87	31.08
LATcc	57.00	55.60	54.62	91.86	63.7	13.24	23.56
Subcool	54.50	53.20	52.22	92.10	58.2	13.16	22.11
Subcool Reheat 1	57.42	54.40	52.22	82.85	58.2	13.23	22.82
Subcool Reheat 2	60.36	55.59	52.22	74.58	58.2	13.31	23.53
Hot Gas Reheat 1	63.31	56.75	52.22	67.19	58.2	13.39	24.25
Hot Gas Reheat 2	66.28	57.89	52.22	60.58	58.2	13.46	24.98

Process Data

Cooling with Dehumidification

Starting State Point: Mixed Air

Ending State Point: LATcc

Enthalpy difference: 7.52 Btu/lb; Refrigeration constant: 4.43

Total cooling: 133,085 Btu/hr (11.1 tons); Moisture removal: 30.8 lb/hr

Cooling with Dehumidification

Starting State Point: LATcc
Ending State Point: Subcool
Enthalpy difference: 1.45 Btu/lb; Refrigeration constant: 4.55
Total cooling: 26,424 Btu/hr (2.2 tons); Moisture removal: 14.1 lb/hr

Sensible Heating
Starting State Point: Subcool
Ending State Point: Subcool Reheat 1
Data: 12,744 Btu/hr heating (variable)

Sensible Heating
Starting State Point: Subcool Reheat 1
Ending State Point: Subcool Reheat 2
Data: 12,744 Btu/hr heating (variable)

Sensible Heating
Starting State Point: Subcool Reheat 2
Ending State Point: Hot Gas Reheat 1
Data: 12,744 Btu/hr heating (variable)

Sensible Heating
Starting State Point: Hot Gas Reheat 1
Ending State Point: Hot Gas Reheat 2
Data: 12,744 Btu/hr heating (variable)

System Data: Air flow rate: 4,000 cfm

Coil data: Cooling coils: 159,509 Btu/hr Heating coils: 50,975 BTU/hr

Definitions:
Mixed Air: Combination of return air and outside air
LATcc: Air temperature leaving coiling coil without subcooling the refrigerant
Subcool: Temperature leaving the cooling coil with benefit of subcooling the refrigerant
Subcool Reheat 1 and 2: Improved supply air temperature due to subcool reheat
Hot Gas Reheat 1 and 2: Reheated air temperature due to waste heat reheat from hot condenser gas

Carolina Heat Pipe Inc.

"The Humidity Control Specialists"

Subcool and Hot Gas Reheat -- Rooftop DX with 100% Outside Air

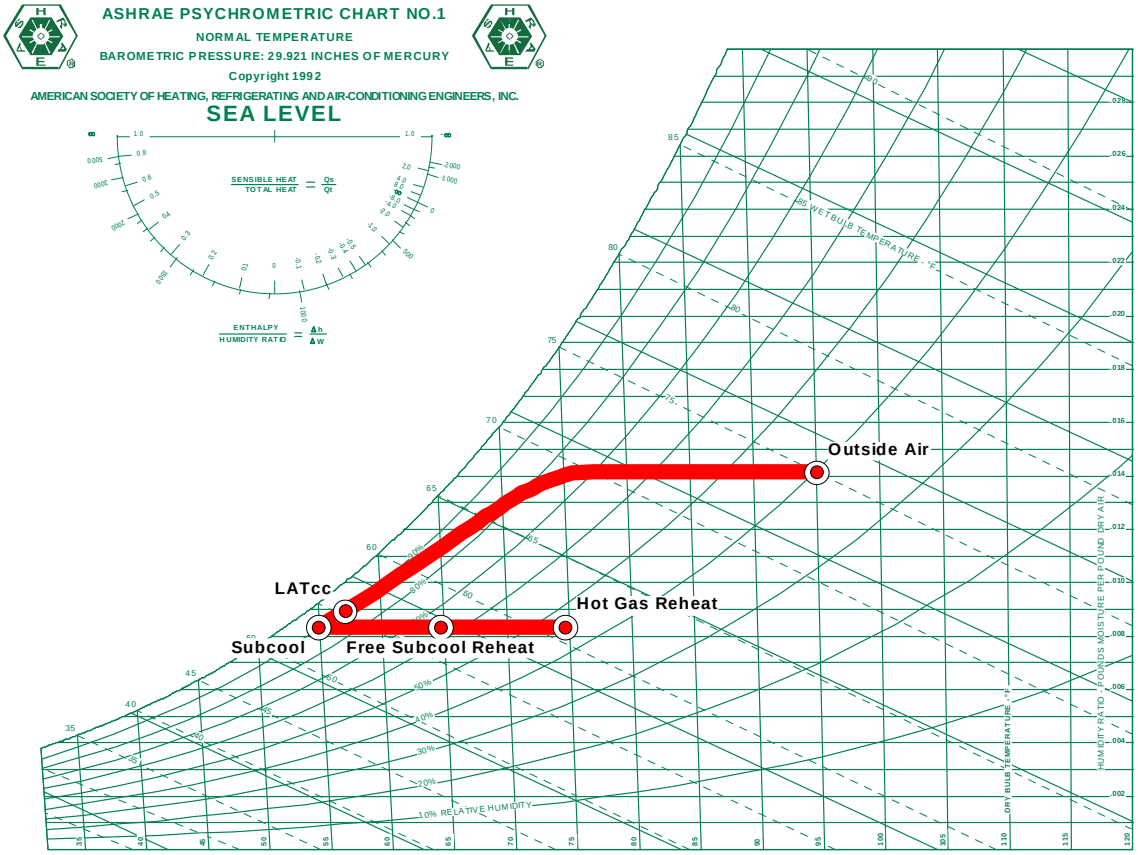

State Point Data

State Point	Dry Bulb °Fdb	Wet bulb °Fwb	Dew point °Fdp	Relative Humidity %Rh	Humidity Ratio grains/lb	Specific volume ft^3/lb	Enthalpy Btu/lb
Outside Air	95.00	75.00	66.78	39.86	98.9	14.35	38.39
LATcc	57.13	55.32	54.05	89.55	62.5	13.26	23.40
Subcool	54.90	53.35	52.19	90.68	58.3	13.19	22.21
Free Subcool Reheat	64.67	57.26	52.19	63.99	58.3	13.44	24.59
Hot Gas Reheat	74.63	60.96	52.19	45.55	58.3	13.70	27.02

Process Data

Cooling with Dehumidification

Starting State Point: Outside Air
Ending State Point: LATcc
Enthalpy difference: 14.99 Btu/lb; Refrigeration constant: 4.35
Total cooling: 29,301 Btu/hr (2.4 tons); Moisture removal: 10.2 lb/hr

Cooling with Dehumidification

Starting State Point: LATcc
Ending State Point: Subcool
Enthalpy difference: 1.19 Btu/lb; Refrigeration constant: 4.54

Total cooling: 2,432 Btu/hr (0.2 tons); Moisture removal: 1.2 lb/hr

Sensible Heating
- Starting State Point: Subcool
- Ending State Point: Free Subcool Reheat
- Data: 4,755 Btu/hr heating (variable)

Sensible Heating
- Starting State Point: Free Subcool Reheat
- Ending State Point: Hot Gas Reheat
- Data: 4,754 Btu/hr heating (variable)

System Data: Air flow rate: 450 cfm

Coil data: Cooling coils: 36,487 Btu/hr
Heating coils: 4,755 Btu/hr

Definitions:

LATcc: Air temperature leaving coiling coil without subcooling the refrigerant

Subcool: Temperature leaving the cooling coil with benefit of subcooling the refrigerant

Free Subcool Reheat: Improved supply air due to subcool reheat

Hot Gas Reheat: Improved supply air due to waste reheat from hot condenser gas

Carolina Heat Pipe Inc.

"The Humidity Control Specialists"

Subcool and Hot Gas Reheat -- Split DX with 100% Outside Air

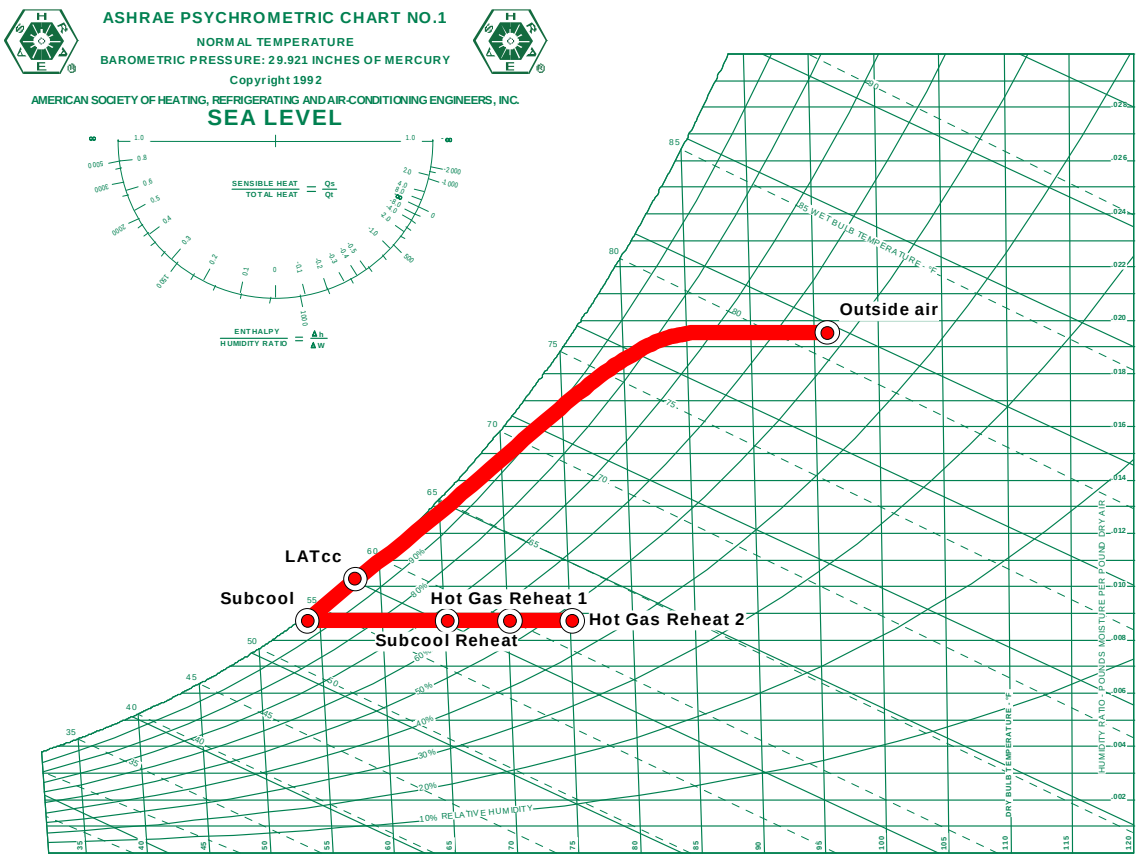

State Point Data

State Point	Dry Bulb °Fdb	Wet bulb °Fwb	Dew point °Fdp	Relative Humidity %Rh	Humidity Ratio grains/lb	Specific volume ft^3/lb	Enthalpy Btu/lb
Outside Air	96.00	81.00	76.18	53.11	139.2	14.72	44.97
LATcc	58.00	57.97	57.91	99.83	73.1	13.51	25.26
Subcool	54.00	53.70	53.45	98.16	62.0	13.37	22.57
Subcool Reheat	65.15	58.07	53.45	65.94	62.0	13.66	25.29
Hot Gas Reheat 1	70.15	59.91	53.45	55.50	62.0	13.79	26.51
Hot Gas Reheat 2	75.15	61.69	53.45	46.89	62.0	13.93	27.72

Process Data

Cooling with Dehumidification

Starting State Point: Outside Air
Ending State Point: LATcc
Enthalpy difference: 19.71 Btu/lb; Refrigeration constant: 4.25
Total cooling: 67,019 Btu/hr (5.6 tons); Moisture removal: 32.1 lb/hr

Cooling with Dehumidification

Starting State Point: LATcc
Ending State Point: Subcool
Enthalpy difference: 2.70 Btu/lb; Refrigeration constant: 4.46
Total cooling: 9,622 Btu/hr (0.8 tons); Moisture removal: 5.7 lb/hr

Sensible Heating

Starting State Point: Subcool
Ending State Point: Subcool Reheat
Data: 9,497 Btu/hr heating (variable)

Sensible Heating
Starting State Point: Subcool Reheat
Ending State Point: Hot Gas Reheat 1
Data: 4,195 Btu/hr heating (variable)

Sensible Heating
Starting State Point: Hot Gas Reheat 1
Ending State Point: Hot Gas Reheat 2
Data: 4,156 Btu/hr heating (variable)

System Data: Air flow rate: 800 cfm

Coil data: Cooling coils: 76,642 Btu/hr
Heating coils: 17,848 BTU/hr

Carolina Heat Pipe Inc.

"The Humidity Control Specialists"

SUBCOOL AND HOT GAS REHEAT DATA GUIDE SHEET

Project name: _____ **Job Site:** _____

❑ **Factory installation** **Company:** _____
OR **Point of contact:** _____
❑ **Field installation** **Phone:** _____ **Fax:** _____

Project status: ❑ **In design/Pre-Bid** ❑ **Bid and Spec** ❑ **Design/Build**

Being quoted to:
❑ **Owner** ❑ **Contractor** ❑ **HVAC equipment manufacturer** ❑ **Other**

Estimated job start date: _____

Design Engineer: _____ **Phone:** _____

Design conditions
Unit CFM: _____ **Percent Outside Air:** _____% **or** _____**CFM**
Outside Air: ___/___ **°F,DB/WB**
Entering Air: ___/___ **°F,DB/WB**
Leaving air, cooling coil: ___/___ **°F,DB/WB** ***(without Heat Pipe)***
Space Conditions: / **°F.DB/WB**

Air Handler or RTU information
Manufacturer: _____ **Model number:** _____
Tons: _____

Cooling coil data:
❑ **Chilled Water** ❑ **Direct Expansion**

Capacity(Mbtuh): _____ **Latent** _____ **Sensible** _____ **Total**

Fin material: ❑ **Copper** ❑ **Aluminum**

❑ **Performance sheet attached** ❑ **Selection sheet attached**
❑ **Mechanical schedule and specs from project drawings attached**

Comments and additional information:
_____
_____
_____

109 Wappoo Creek Drive, Suite 4B Charleston, SC 29412 ph: 843.795.9965 fax: 843.795.9757
www.carolinaheatpipe.com

IV. Specification Guidance, Control Strategy and Design Procedures

Our personnel with their experience are ready to assist you in your design.

		Page
1.0	Specification Guidance and Control Strategy	IV-1
2.0	Design Analysis	IV-3
3.0	Load Calculations	IV-5
4.0	Building Envelope Requirements	IV-8
5.0	Air Flow Requirements	IV-9
6.0	Part Load Performance of Systems	IV-11
7.0	Importance of Controlling Thermosyphon Heat Pipe	IV-13
8.0	Selection Procedures for Thermoysphon Heat Pipe	IV-14

1.0 Specification Guidance And Control Strategy

1.1 BACKGROUND: In addition to air conditioning units that condition both return air and some outside air we often see consulting engineers specify a unit totally dedicated to providing conditioned outside air with a separate air distribution. Also, on large and medium size HVAC systems we see Variable Air Volume (VAV) boxes or fan powered VAV boxes with reheat coils or strips usually used to maintain the desired room temperature.

To ensure the energy savings and dehumidification benefits from the customized equipment provided by Carolina Heat Pipe we have recommended that some selection and control strategy be considered. With this in mind, a general guidance specification has been provided.

1.2 GENERAL SPECIFICATION GUIDANCE: It is always desirable to tailor the dehumidification system to the mechanical system. First decide if a factory installation is possible or an installation at the job site is necessary. A factory installation will usually be preferred and less expensive if shipping size and weight conditions permit. In this case, the air handling unit supplier must be directed to ship the cooling coil with drainable blank coil type sections on either side of the cooling coils to Carolina Heat Pipe for the installation of the thermosyphon.

For direct expansion air conditioning or heat pump roof top units, the project engineer is advised to plan to specify that the entire package be sent to the Carolina Heat Pipe facility for installation of the dehumidification system. Sometimes, for split systems, it may only be necessary to ship the air handler to the Carolina Heat Pipe facility.

When a retrofit of existing equipment is necessary or when air handler cooling coils must be field assembled, the associated thermosyphon probably also needs to be field assembled. This will require a specially trained factory crew to visit the job site to plan and complete the thermosyphon installation work. The associated cost must be anticipated because it is unreasonable to expect that the typical mechanical contractor will possess the necessary skilled labor for the installation.

When specifying the cooling coil it may be possible to take advantage of the temperature reduction due to the precool section of the thermosyphon. This could reduce the peak load design temperature of the cooling coil or evaporator coil leaving air temperature. For this reason the design engineer should always specify both the thermosyphon entering air temperature as well as the air temperature entering cooling coil. In addition he should specify the required cooling coil leaving air temperature and the thermosyphon leaving air temperature. This then allow the air handler unit supplier to select the proper cooling coil.

For example, if the mixed air temperature is 80º F (dB) and 65.5º F (wB) and if the thermosyphon is designed to reduce the air temperature by 8º F (dB), then the cooling coil will see 72 º F (dB) and 62.8º F (wB) as the entering air reading.

This enthalpy reduction results in a colder cooling coil leaving air temperature, say 51º F vs. 52º F (dB). In turn the thermosyphon transfers this enthalpy to the reheat section of the thermosyphon so that the air leaving the cooling coil is reheated from say 51º F (dB) / 50º F (wB) to 59º F (dB) / 53.4º F (wB) or 70% Relative Humidity.

Now the air entering the supply duct from the air handler is at about 70% relative humidity (Rh). When motor heat from a draw-through fan is added, the Rh is further reduced. This strategy provides, at design conditions, a supply duct relative humidity of 70 % or less; the humidity recommended in paragraph 5.11 of ANSI/ ASHRAE Standard 62-2001(see section VII this catalog).

Please note that this is all done without adding additional external energy such as electric strip heat or hot water reheat coils.

1.3 CONTROL SYSTEM STRATEGY AND SPECIFICATION RECOMMENDATIONS: On some air conditioning system jobs where controlling space humidity levels is critical, coordination with the control system has become an issue. Increasingly, we have found that many control contractors did not fully understand the importance of controlling dew point to insure moisture removal with a cold coil, while reheating the supply air at the air handler to avoid condensation in the supply duct. In hot humid climates good moisture removal often requires a fifty-two (52º F) (dB) degree F cooling coil leaving air temperature. However, what must be done at reduced sensible cooling loads to maintain space temperature while holding a cooling coil dew point for latent cooling (moisture removal)?

This part sensible load problem usually requires some type of air bypass system, a staging of the cooling coils, or some type of air volume control (variable frequency drive, etc.) or some additional trimming reheat source.

It is usually the responsibility of the HVAC design engineer to convey to the control system provider the importance and need for the system to operate at both design conditions and part load conditions. Control of moisture removal as well as space temperature must be emphasized as important at part load conditions.

This necessitates that the control specification includes a detailed description of the control strategy that is to be employed to insure proper operation of the air conditioning system.

The current practice of varying the coil leaving air temperature to control the space sensible load has traditionally been the control system of choice for over 90 % of the mechanical systems we have seen. When the chilled water valve modulates to the closed position often, the cooling coil will not have any latent capacity for the first ten or fifteen degrees of sensible cooling. This will not work for moisture removal.

This simple fact has required a great deal of explanation and retraining of those operating and programming the control of air conditioning systems that are expected to control both temperature and humidity. Is it any wonder that there are some HVAC professionals who advocate separating the fundamental functions of an air conditioning system - temperature reduction (sensible load) and moisture removal (latent load)?

2.0 Design Analysis:

2.1 BASIC FORMULAS: Some of the basic formulas used to evaluate air conditioning systems are:

TOTAL HEAT:
Q (t) = 4.5 x CFM x CHANGE IN ENTHALPY (h)

SENSIBLE HEAT:
Q (s) = 1.08 x CFM x CHANGE IN TEMPERATURE (DB)

LATENT HEAT:
Q (l) = 0.69 x CFM x CHANGE IN HUMIDITY RATIO (GRAINS), (W)

The total heat requirements and the sensible heat requirements are better understood than the latent load requirements and the part load requirements of air conditioning systems. Several load factors have also impacted the analysis of air conditioning systems.

2.2 LOAD FACTORS: Architects, Engineers, & building owners have been adding insulation and sealing buildings to reduce the cost of operating buildings. This has reduced the sensible loads. The latent load from people has remained static and the latent load from increased ventilation is larger. The ratio between the latent loads and the sensible loads has shifted and the latent loads will have a larger percentage of the total loads.

Equipment Manufacturers have improved the sensible capacity of their equipment by using higher suction temperature coils to achieve a higher EER & SEER unit capacity. Some units will have a lower latent capacity. This coupled with a sensible load reduction and static or increasing latent load will usually increases the space humidity levels.

2.3 PART LOAD FACTORS: The part load factors are centered on two main issues.

2.3 1. The sensible loads will have large reductions while the latent loads will remain high.

2.3 2. The air conditioning units will have small sensible reductions while the latent load capacity will have large reductions.

Examples of buildings with large sensible load variations and small latent load variations include restaurants, schools, theaters, gyms and clubs. When the sun sets, the sensible load will reduce. The latent loads from the people and outside air will remain static or increase.

An example of an air conditioning unit's sensible and latent capacity load reductions can be demonstrative by analyzing a chilled water coil air-handling unit. If a 55-degree (DB) coil leaving air temperature is required at full sensible load, then a 65-degree (DB) leaving air temperature will be required to provide 50% sensible load. A 65-degree (DB) leaving air temperature will not provide enough latent capacity to maintain a 50% room relative humidity. DX equipment will have similar reductions in latent capacity.

At part load conditions, the latent loads are usually high and the unit's latent capacity is usually low. This results in high room relative humidity at system part load operation.

3.0 Load Calculations

Latent loads are usually associated with outside air requirements and infiltration, and the latent loads from people and animals. Latent loads can also come from bathrooms (showers), cooking, plants, fish tanks, and any process that allows moisture to evaporate. Large portions of latent loads associated with bathrooms, and cooking may be exhausted. The 2001 ASHRAE Guide of Fundamentals provides additional data to assist in latent load calculations.

To change water from a liquid to a vapor approximately 960 BTU are required for each pound of water. The same cooling capacity is required to condense the water vapor to a liquid. Air must be cooled to the dew point before moisture can be removed from air. Sensible cooling will occur at many part load conditions. This will present unique problems for designers and installers of air conditioning systems.

3.1 OUTSIDE AIR ASSUMPTIONS:

	DB / WB or Humidity	
Outside air:	95 / 78 (h = 41.58, w = 118)	
Inside temperature:	75 / 50 %	(h = 32.02, w = 65)
Cooling to room temp.	75 / 71.2	(h = 35.13' w = 109)
Cooling to humidity ratio	56 / 55.5	(h = 23.53, w = 65)
Air quantity	1,000 CFM	

H is enthalpy (BTU/ pound of dry air)
w is humidity ratio (grains of moisture per pound of dry air)

The heat in outside air can be divided into sensible and latent (moisture) portions. If the outside air is cooled to the room dry bulb temperature the moisture in the outside air will be excessive. The following example will demonstrate this:

The sensible cooling for 1,000 CFM is:

Q (t) = 1.08 x 1,000 x (95 - 75) = 21,600 BTU/HR

The latent cooling for 1,000 CFM is:

Q (l) = 0.69 x 1,000 x (118 - 109) = 6,210 BTU/HR

The outside air is assumed to be 20% of the total CFM. When the sensibly cooled air is added to the return air, the humidity ratio will increase to 73.8 grains.

(1,000 CFM x 109 + 4,000 CFM x 65) / 5000 CFM = 73.8 grains of humidity ratio

The resulting moisture level entering the cooling coil will increase 13.5 % (73.8 / 65). The coil's leaving air temperature will also increase. The increased moisture content of the supply air will in turn drive the room humidity level above the desired 50% relative humidity.

To remove the moisture in the outside air it must be cooled to or below the humidity ratio (Dew Point) of the indoor air. The cooling BTU's required to cool the outside air and maintain the room relative humidity is:

TOTAL COOLING:
Q (t) = 4.5 x 1,000 x (41.58 - 23.53) = 81,225 BTU/HR (6.77 TONS)
(This is approximately 0.7 tons per 100 CFM of outside air.)

SENSIBLE COOLING:
Q (s) = 1.08 x 1,000 x (95-55) = 43,200 BTU/HR (3.6 TONS)

LATENT COOLING:
Q (l) = 0.69 x 1,000 x (118 - 65) = 36,570 BTU/HR (3.05 TONS)

The small variation in the calculation totals is due to rounding errors.

Many package unit manufacturers design their units to mostly remove sensible heat.

The ratio of the outside air, sensible and the latent loads are 53% sensible and 47% latent loads. With the high latent load of the outside air, special evaporator coils and equipment designs are required for units with a large amount of outside air.

To avoid supply duct condensation and attain acceptable comfort levels it is normally necessary to additionally provide some form of reheat to the supply air leaving the cooling coil.

The products available from Carolina Heat Pipe Inc. when incorporated into an air conditioning or heat pump system achieve both improved moisture removal and free reheat. This is usually done passively – without adding energy.

3.2 LATENT LOADS DUE TO OCCUPANTS:

People will usually have a 200 TO 250 BTU/HR sensible heat and a 200 to a 600 BTU/HR latent heat. The latent heat ratio will be between 60 % and 70 %. With packaged equipment designed for a 30 % latent capacity a potential problem will be present. Buildings with large occupancies (school classrooms, auditoriums, and sports arenas) require equipment that emphasizes moisture removal (latent capacity).

As an example a typical school classroom is analyzed.

Room load:	36,000 BTU/HR (3 tons)
Room temperature:	75 / 50 % (humidity ratio of 65)
Supply Air CFM	1,200
30 students, 1 teacher	200 BTU/HR latent capacity

To maintain the room humidity level the supply air must be capable of removing 6,200 BTU/HR of latent load. This will require the supply air to be 7.49 grains below the room's desired humidity ratio or 57.5 grains (65 grains – 7.49 grains). From analyzing a psychometric chart, a 51.5-degree dew point is needed to maintain the room humidity level.

30 students plus 1 teacher x 200 BTU/HR = 6,200 Room Latent Load

Q (l) = .069 x CFM x CHANGE IN HUMIDITY RATIO (w)

w = Q (l) / (0.69 X CFM) = 6,200 / (0.69 X 1,200) = 7.49 Grains

Most package equipment will have a 60-degree supply air temperature leaving the cooling coil when a 53 degree temperature is often needed to meet the room's latent load requirements.

4.0 Building Envelope Requirements

In Northern climates, a vapor barrier is needed on the inside of the building during the winter. In Southern climates, a vapor barrier is needed on the outside of the building during hot and humid weather. A vapor barrier is needed on the warm side of the building (whether it is inside or outside). Air conditioning ducts have a vapor barrier on the outside of the duct where the air is warm and moist. When buildings are cooled they need a vapor barrier on the exterior of the building. Engineers need to insure that Architects and Builders install a vapor barrier near the building's exterior. This will include ventilated attics and ventilated crawl spaces. Moisture should not be allowed to penetrate the ceiling, walls or floors.

The outside air moisture loads should be reduced or eliminated. Buildings should be pressurized to reduce the infiltration of hot and humid (un-treated) air. The CFM required for pressurization is not an exact calculation. The exterior wind will affect the building infiltration rate. The height of a building will also affect the infiltration rate. The building should not be negative. The make-up CFM should equal the exhaust CFM and provide estimated 10 % capacity reserve (10 % pressurization capacity).

5.0 Air Flow Requirements

When a cooling coil begins to cool air, the first few degrees of cooling does not remove any moisture or (latent heat). The Trane Company psychometric chart has some anticipated cooling coil performance estimates superimposed. This will aid a design engineer is analyzing the latent removal capacity of cooling coils and air conditioning systems. The important thing to remember is that the first few degrees of cooling does not remove any moisture from the air that is being cooled. This is normally called "sensible Cooling". At 70 % relative humidity some moisture removal will start. Between 80 and 90 % relative humidity the percentage of moisture removal increases dramatically. After 90% relative humidity, the moisture removal is at maximum and the coil leaving air temperature will approach the wet bulb air temperature of the air leaving the coil.

The room airflow calculation requires some additional analysis, when latent loads are added to the design requirements and humidity control is required, the desired space relative humidity and the space latent loads are used to determine the required coil leaving air temperature. As an example a typical school classroom will be analyzed. If a room temperature of 75-degrees with 50% relative humidity is desired, the space will have a humidity ratio of 65 grains of moisture and a 55-degree dew point. If the supply air to the space has a moisture level that exceeds the desired room moisture level, then the room relative humidity will increase. Without any room latent loads, approximately a 55-degree (dry bulb) coil leaving air temperature is required to avoid increasing the space relative humidity.

The room latent loads now must be added to the analysis. If 31 people with 200 BTU/HR. latent load are in the classroom, then the room latent load will be 6,200 BTU. The formula listed below can be used to determine the required coil leaving air temperature.

Latent Heat (Q) = .69 x CFM X change in humidity ratio (W)

We have one formula and two unknowns. The CFM and the change in the humidity ratio are not known. If we assume a CFM between 1.0 and 1.25 CFM per square feet the problem could be solved for the change in the humidity ratio. (1.0 CFM per sq. ft. is approximately 400 sq. ft. per ton and 1.25 CFM per sq. ft. is approximately 300 sq. ft. per ton), and a 30 by 30 classroom, the CFM will be approximately 1,125 (1.25 x 30 x 30). With this CFM the change in the humidity ratio will be:

Change in Humidity Ratio = Latent Heat / (.69 x CFM) = 6,200 / (.69 x 1,125)

= 7.79 Grains per pound of dry air.

Subtracting 7.79 grains from the 65 grains in the space, the supply air temperature can be established. 57.2 grains of moisture will correlate with a 51-degree dew point. Depending on the temperature of the air entering the cooling coil, a 52 to a 55-degree coil (dry bulb) temperature is required.

The room sensible heat can be calculated to check the CFM and room capacity requirements.

Sensible Heat = 1.08 x CFM x Change in Temperature

= 1.08 x 1,125 (75 – 54) = 25,515

This approximates the required room sensible load.

6.0 Part Load Performance of Systems

Because Air Conditioning Systems operate a great deal of time at Part Load Conditions rather than Full Design Load Conditions, there is increased emphasis on the Part Load Performance of Systems. More and more, Design Engineers are becoming aware of this and realizing their responsibility for Part Load Performance from a Liability Standpoint.

Typically, two common practical ways to meet Part Load Design Conditions have been used. Both have their drawbacks in terms of health and comfort.

6.1 Maintain the Leaving Air Temperature of the Cooling Coil and slow the airflow.

Drawback: Fresh Air Ventilation is reduced
Building Ventilation is reduced
Room Air Change Rate is reduced leading to insufficient removal of contaminants from the conditioned space
Non-Compliance with ASHRAE Standard 62-2001

6.2. Maintain airflow and increase the Leaving Air Temperature of the Cooling Coil.

Drawback: Insufficient Dehumidification leading to High Relative Humidity
Reduced Comfort
Mold growth

The introduction of Reheat (preferably Passive Reheat) is the only effective way to deal with Part Load. This is because it allows for both proper dehumidification, Fresh Air and Room Air Change Rates. Carolina Heat Pipe's Passive Thermosyphon Heat Pipe Heat Exchanger Systems provide passive reheat and precooling without the costly energy penalty of Active Reheat Systems.

The Part Load performance of our System is easily demonstrated and calculated using the following equation developed by Carolina Heat Pipe's Founder Richard W. Trent:

$$LAT = \left[(SAT - FAN) - (EAT * E)\right] / (1 - E)$$

Note: All temperatures are Dry Bulb.

Where: **LAT** is the Leaving Air Temperature of the Cooling Coil. This is the value we are calculating to insure that the LAT is at a Dew Point for proper dehumidification.

SAT is the Supply Air Temperature required for Part Load Conditions.

FAN is the Delta-T of the supply air fan motor heat.

EAT is the Entering Air Temperature at Part Load Conditions.

E is effectiveness of the Passive Heat Pipe System taken from the performance curves expressed as a decimal number.

Here is a typical example of the performance of a Chilled Water Air Handler at Part Load:

SAT = 65 F
FAN = 1 F
EAT = 78 F
E = .30

The LAT of the cooling coil is 64 F which typically represents no moisture removal by the System. The relative humidity in the conditioned space will rise to a level of 70 to 80%.

With the addition of Carolina Heat Pipe's Passive Thermosyphon Heat Pipe Heat Exchanger System the LAT of the cooling coil will be as follows:

$$LAT = [(65 - 1) - (78 * .30)] / (1 - .30)$$

$$LAT = 58 F$$

At LAT of 58 F the relative humidity of the conditioned space will be maintained at 50 to 55%.

7.0 Importance of Controlling Thermosyphon Heat Pipe

Using the same example as above, let's look at the performance of our typical Chilled Water System at Full Load Design Conditions.

Full Load Conditions
SAT = 59 F
FAN = 1 F
EAT = 78 F

The LAT of the cooling coil is 58 F and the relative humidity in the conditioned space will be maintained 50 to 55%. The room Delta-T is 19 F and the proper amount of sensible cooling is also provided.

Now let's look at the performance of this System with a dehumidifying Heat Pipe that is **NOT** controllable.

SAT = 65 F
FAN = 1 F
EAT = 78 F
E = .30

Again the LAT is 58 F but the SAT (supply air temperature) is now 65 F which provides only 68% of the sensible cooling required for Full Load Design Conditions. Obviously, this is not acceptable.

This is the reason that it is imperative that only Controllable Dehumidifying Heat Pipes be used in your design. Controllable Heat Pipes will provide healthy comfortable conditions at all loads.

8.0 Selection Procedure for Thermosyphon Heat Pipe

Select a Sensible Heat Pipe Thermosyphon for a 4,000 CFM system with an entering air temperature (EAT) of 78/67 F, a temperature of 54/53 leaving the cooling coil (LAT) and a minimum reheat of 6 degrees F. The cooling coil has a face area of 8.9 Sq. Ft. for a face velocity of 449 feet per minute (FPM). Each of the two Sensible Heat Pipe Thermosyphon coils will be located in dedicated coil sections. One coil section is located on the upstream side of the cooling coil section and the other on the downstream side. Each dedicated coil section will accommodate a coil of 8.9 Sq. Ft. face area.

8.1 Determine the Heat Pipe Thermosyphon Loop effectiveness required:

8.11 Determine the dry bulb delta T across the cooling coil: EAT - LAT = delta T

78 F - 54 F = 24 F delta T

8.12 Minimum reheat required is 6 degrees F

Effectiveness required: 6 F/ 24 F = 25% effectiveness

8.2 Select number of rows required to meet effectiveness:

Using Figure 1, select a two row Heat Pipe Thermosyphon at 450 FPM resulting in an effectiveness of 30%.

8.3 Determine maximum temperature of air leaving the Reheat Heat Pipe Thermosyphon coil:

8.31 Delta-T of cooling coil X Heat Pipe Thermosyphon effectiveness = delta-T reheat:
24 F x 30% = 7.2 F reheat

8.32 LAT of cooling coil + delta-T reheat = temperature leaving reheat Heat Pipe Thermosyphon coil
54 F + 7.2 = 61.2 F

8.4. Determine Air Pressure Drop for the Heat Pipe Thermosyphon Loop:

Using Figure 2, for a 2 Row Heat Pipe Thermosyphon, there are 2 rows of Precooling Heat Pipe Thermosyphon coil and 2 rows of Reheat Heat Pipe Thermosyphon coil at 450 FPM.

.07 in. W.C. per row of dry coil air pressure drop for each coil.

Heat Pipe Thermosyphon Loop Performance (12 fins per inch)

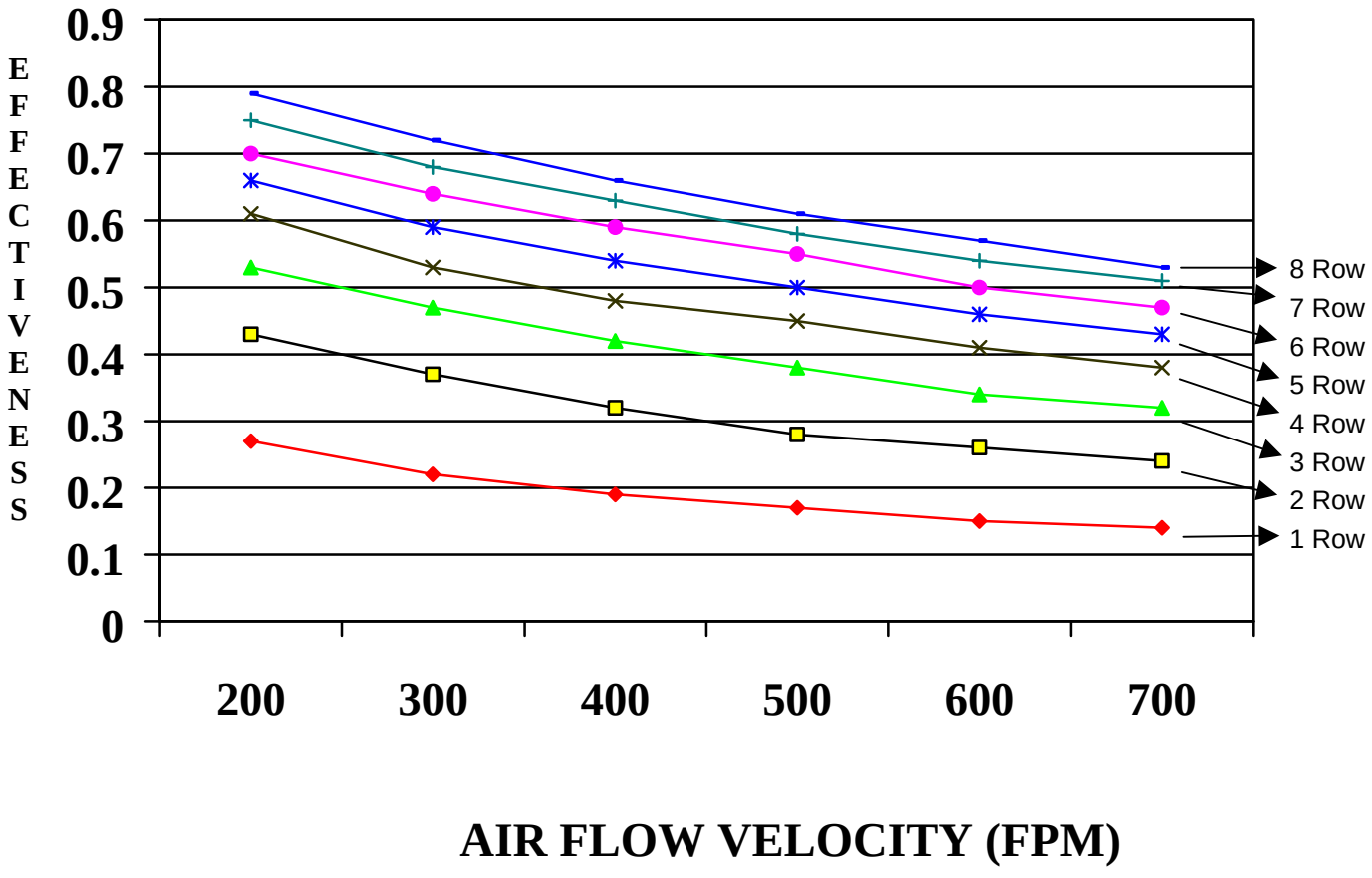

Figure 1

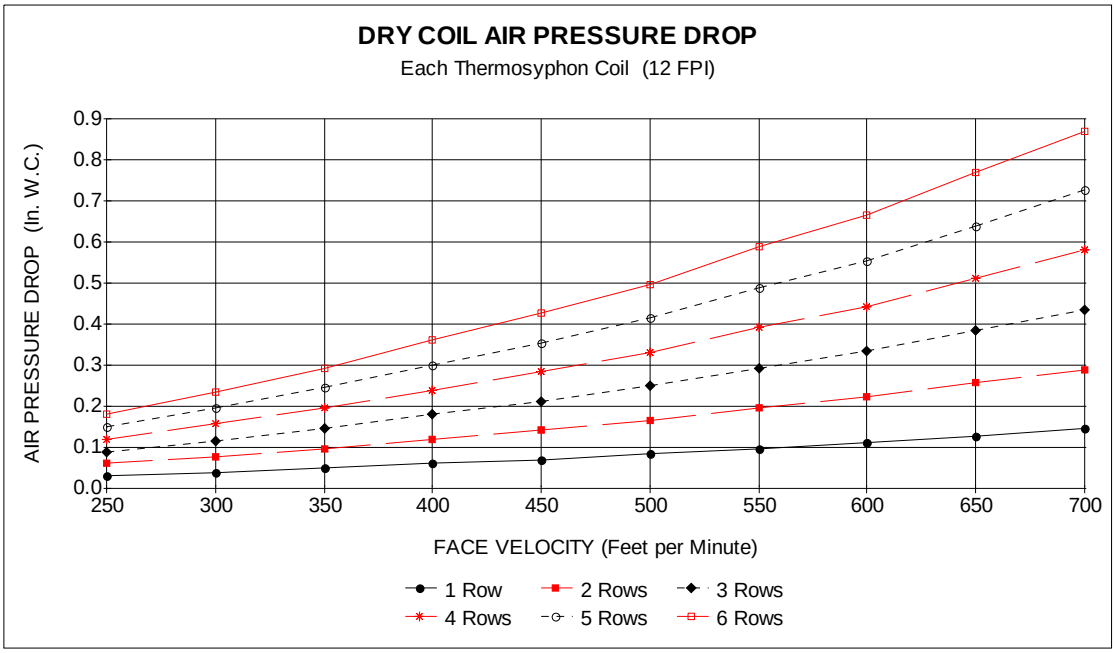

Figure 2

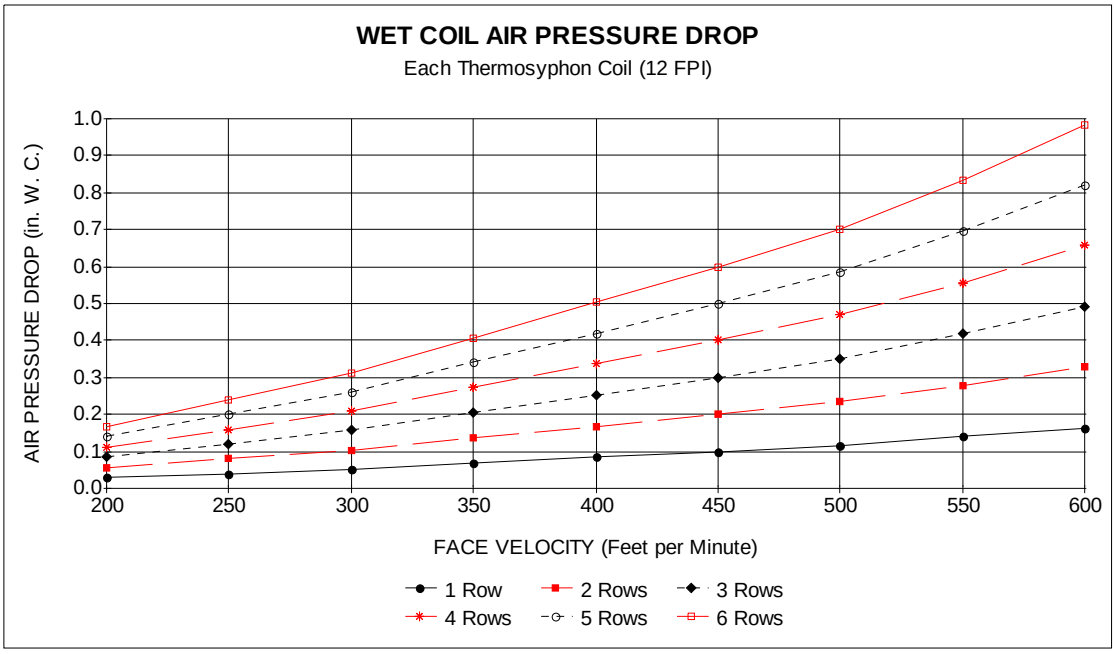

Figure 3

V. Maintenance & Control Systems

	Page
Carolina Heat Pipe Maintenance, Controls and Monitoring	V-1
Five Year Limited Warranty	V-2
Typical Piping Diagram for a Refrigeration System	V-3
Typical Control Valve Wiring	V-4-8
Dehumidification with TRAHP™	V-9
Dehumidification With Controllable Hot Gas Reheat	V-10
Split System Heat Recovery TRAHP™	V-11
Various DDC, Control Valve, and Sensor material currently used	V-12

Carolina Heat Pipe Maintenance, Controls and Monitoring

Maintenance of TRAHP™ Coils

The only maintenance for the thermosyphon heat pipe coils provided by Carolina Heat Pipe is periodic cleaning using conventional coil cleaners used on other heating and cooling coils.

Carolina Heat Pipe Thermosyphon heat pipe coils are normally designed so they can be washed in place. If air filters are changed or cleaned on a regular basis full design performance will be maintained.

The thermosyphons are precisely charged and sealed. There is no need to apply pressure gauges to check the charge, as this will degrade the performance. Should a leak be indicated because of performance, the supplier must be notified so the leak can be located, repaired and the thermosyphon heat pipe circuit properly evacuated and recharged.

Maintenance of TRAHP™ Loops

The Thermosyphon Run Around Heat Pipe (TRAHP™) Loops provided by Carolina Heat Pipe, Inc. have been precisely charged and placed to attain the heat transfer requirement of the particular application where they have been installed.

Any attempt to monitor or adjust the charge by anyone other than a factory-authorized representative may result in serious loss of performance and must be avoided.

Should a refrigerant charge be lost, a factory representative must locate and repair the leak, properly evacuate and recharge the unit.

The thermosyphon performance is a function of the temperature differential between the heat sink and the heat source. The operating air conditioning system normally provides the required temperature differential.

Actual thermosyphon run around heat pipe (TRAHP™) loops may be verified during operation by measuring the temperature of the air stream as it enters and leaves the precool and reheat portion of the thermosyphon.

Five Year Limited Warranty

CAROLINA HEAT PIPE INC. (CHP) will warrant to the original owner its ST Mach I Thermosyphon run-Around Heat Pipe (TRAHP™), Controllable Subcool & Hot Gas Waste Heat Reheat, and Heat Recovery Heat Pipe Solutions for a period of five years from the date of manufacture. Products are warranted to be free of defective materials and workmanship.

CAROLINA HEAT PIPE INC. reserves the right to inspect all allegedly defective products prior to providing warranty compensation. This warranty is in lieu of all other warrants not expressly set forth herein, whether expressed or implied by operation of law or otherwise. In the event that one of these products should fail under normal use and service within the applicable period, CAROLINA HEAT PIPE, INC. will correct, repair or at its sole discretion, replace the defective product or refund the purchase price of products, which are returned freight prepaid to CHP.

The customer must obtain factory authorization to return defective product. Products shipped without factory authorization will be returned freight collect to the point of origin. Authorization to return product must come direct the factory. Sales representatives are not empowered to authorize returns. Before such authorization will be granted, a detailed description of the problem, including model and serial numbers of the products involved and the exact nature of the problems, must be provided to the factory.

Once factory authorization to return product has been obtained, the customer must ship the product to the factory freight prepaid. Freight collect shipments will be refused. Products damaged due to poor packaging or mishandling will not be considered for warranty compensation.

Upon receipt CHP will inspect and test. If testing reveals that the product is free from defect, it will be shipped freight collect back to the customer or scrapped depending on customer preference.

Limitations on Liability

Equipment not manufactured by CAROLINA HEAT PIPE INC. is subject only to the warranties of CHP's vendors. CHP hereby assigns to buyer all rights in such vendor and disclaims any liability whatsoever in connection with such equipment.

CHP is not liable for non-performance due to, nor replacement of parts rendered defective by corrosion, erosion, improper operation, or installation, nor for failure or defective performance due to fouling. Repairs or alterations not made by CHP without CHP's prior written consent shall void all warranties. This includes use of parts or materials not furnished or approved by CHP or its authorized representatives. CHP total responsibility for any claims, damages, losses or liabilities related to the product sold to a particular customer shall not exceed the purchase price of that transaction. In addition, CHP shall not be liable for the cost or results of repairs or alterations made by others without CHP's prior written consent. CHP shall not be liable for damage or repairs required as a consequence of faulty installation or application by others or failure to follow normal maintenance procedures as specified by CHP. Nor shall CHP be liable for failures or damage due to misuse, abuse, improper shipping, storage or handling, abnormal conditions of temperature, water, dirt, corrosive substances or other contaminants.

This warranty does not cover damage or loss or expense, directly or indirectly resulting from the use of its products, including without limitation consequential damages or contingent liability of any nature whatsoever such as that resulting from loss of production facilities or equipment, loss of profits, property damage, loss of production, or personal injury whether suffered by purchaser or any third party, flood, winds, fires, lightening, accidents, corrosive atmospheres or other conditions beyond CHP's control.

Typical Piping Diagram

For a Refrigeration System

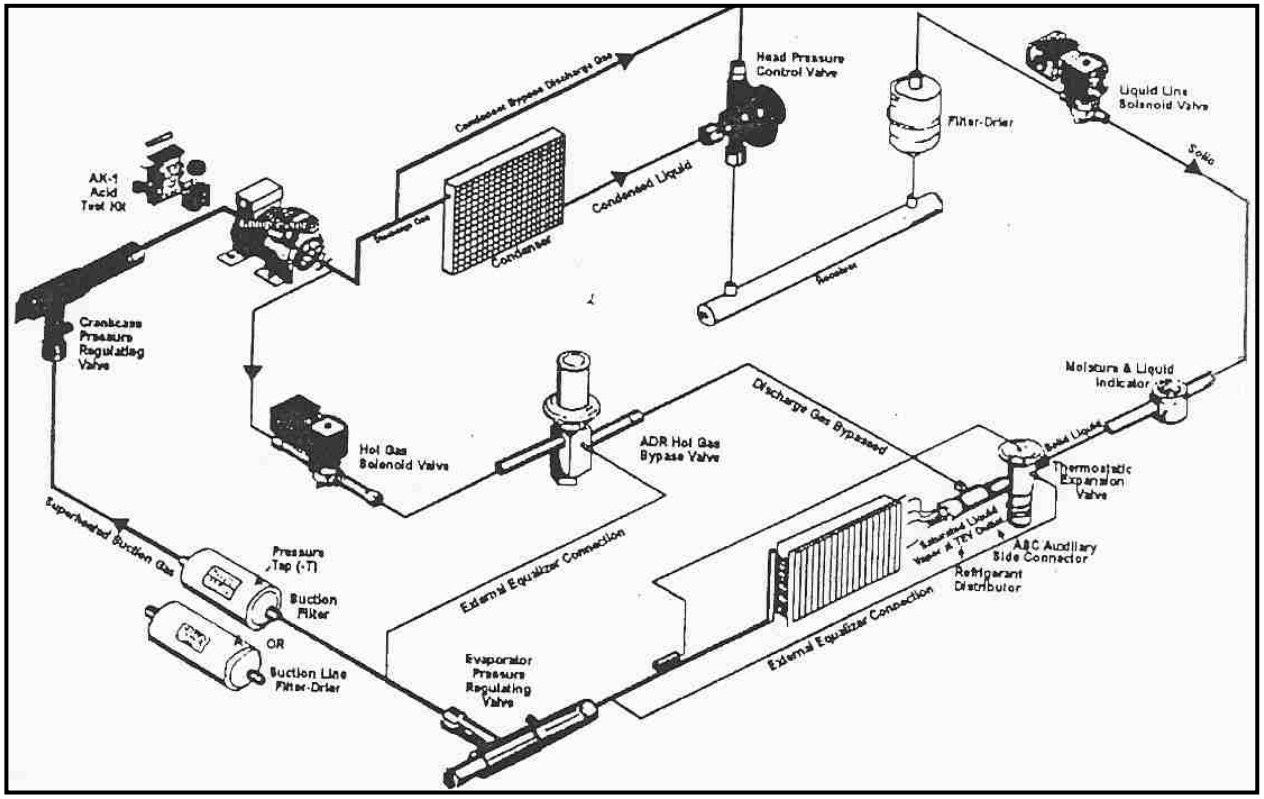

Typical Control Wiring

For On / Off Valve

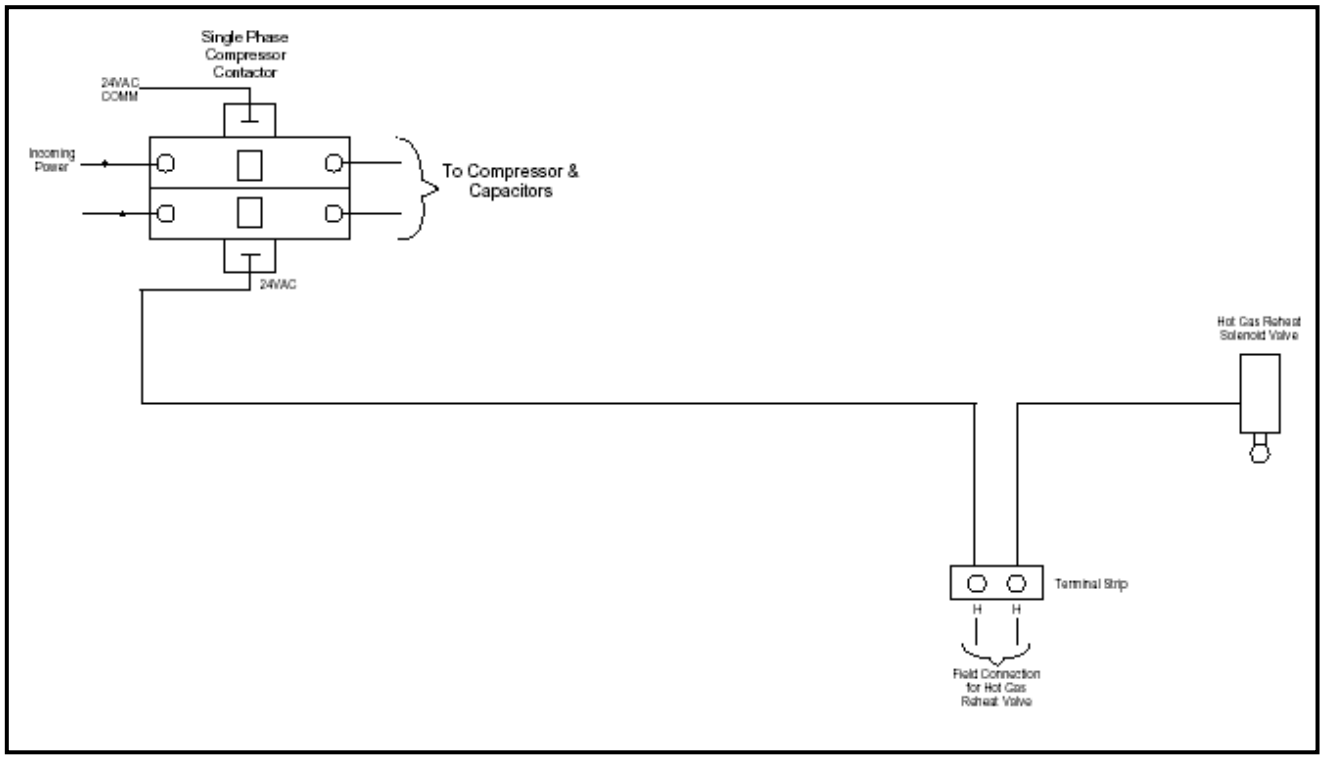

Typical Control Wiring For a Modulating Valve

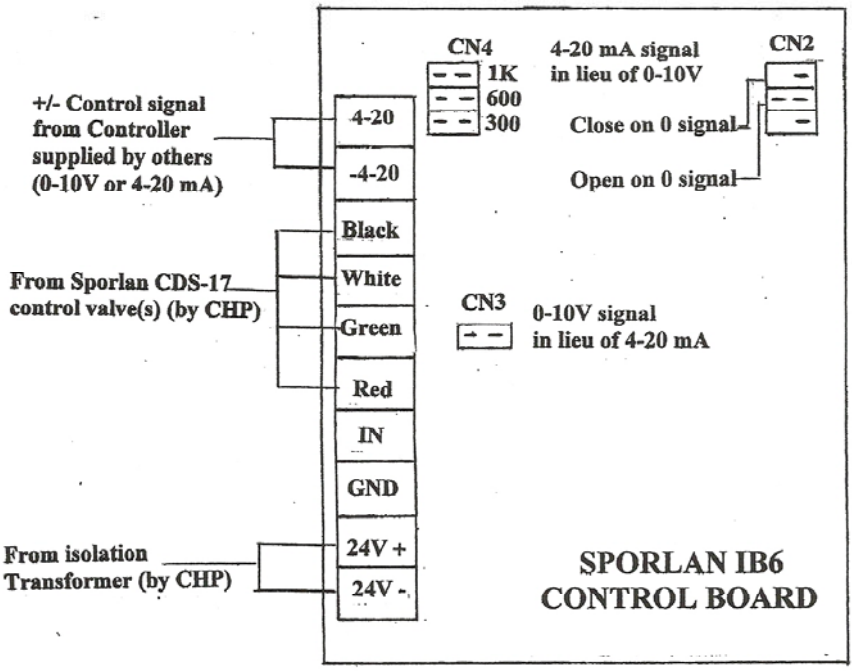

Notes: (1) Verify signal supplied by others 0-10 volts or 4-20 milliamp.

(2) Signal 0-10 volts: Jumper position must be CN3. (No jumper in CN4)
Signal 4-20 milliamps: Verify control signal impedance 1,000 ohms (1k), 600 ohms, 300 ohms. Jumper position must be in CN4, 1K, 300 or 600 location. (No jumper in CN3)

(3) Choose "open on rising signal" jumper is stored on top single pin, or "close on rising signal" where jumper is stored on middle two pins of CN2.

Carolina Heat Pipe Sporlan Modulating Valve Wiring Diagram

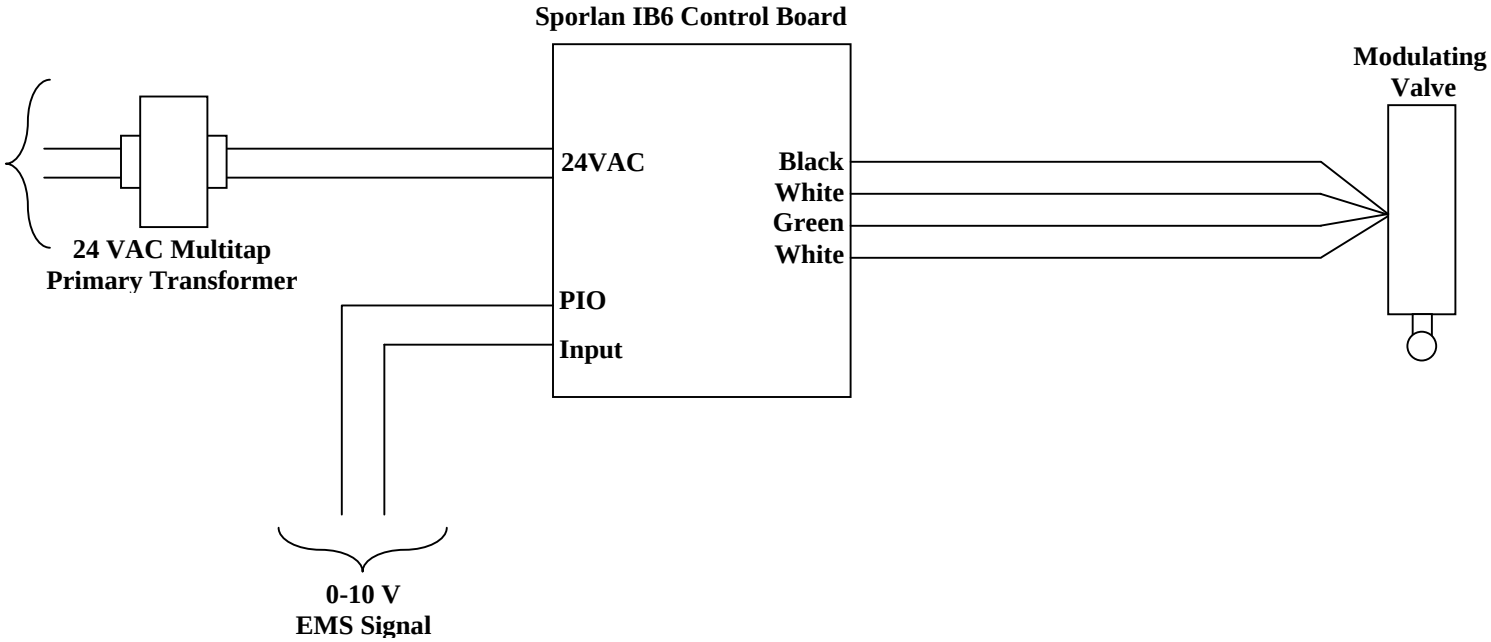

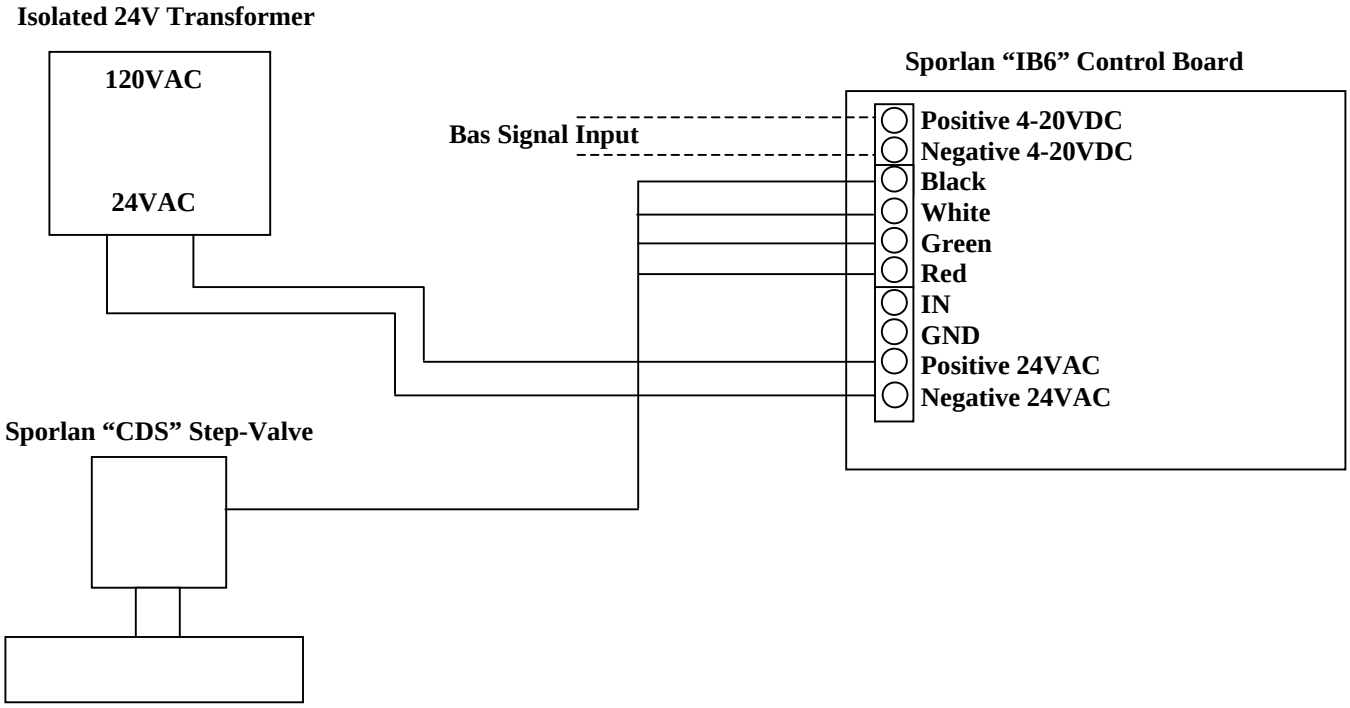

Carolina Heat Pipe On / Off Wiring and Control System

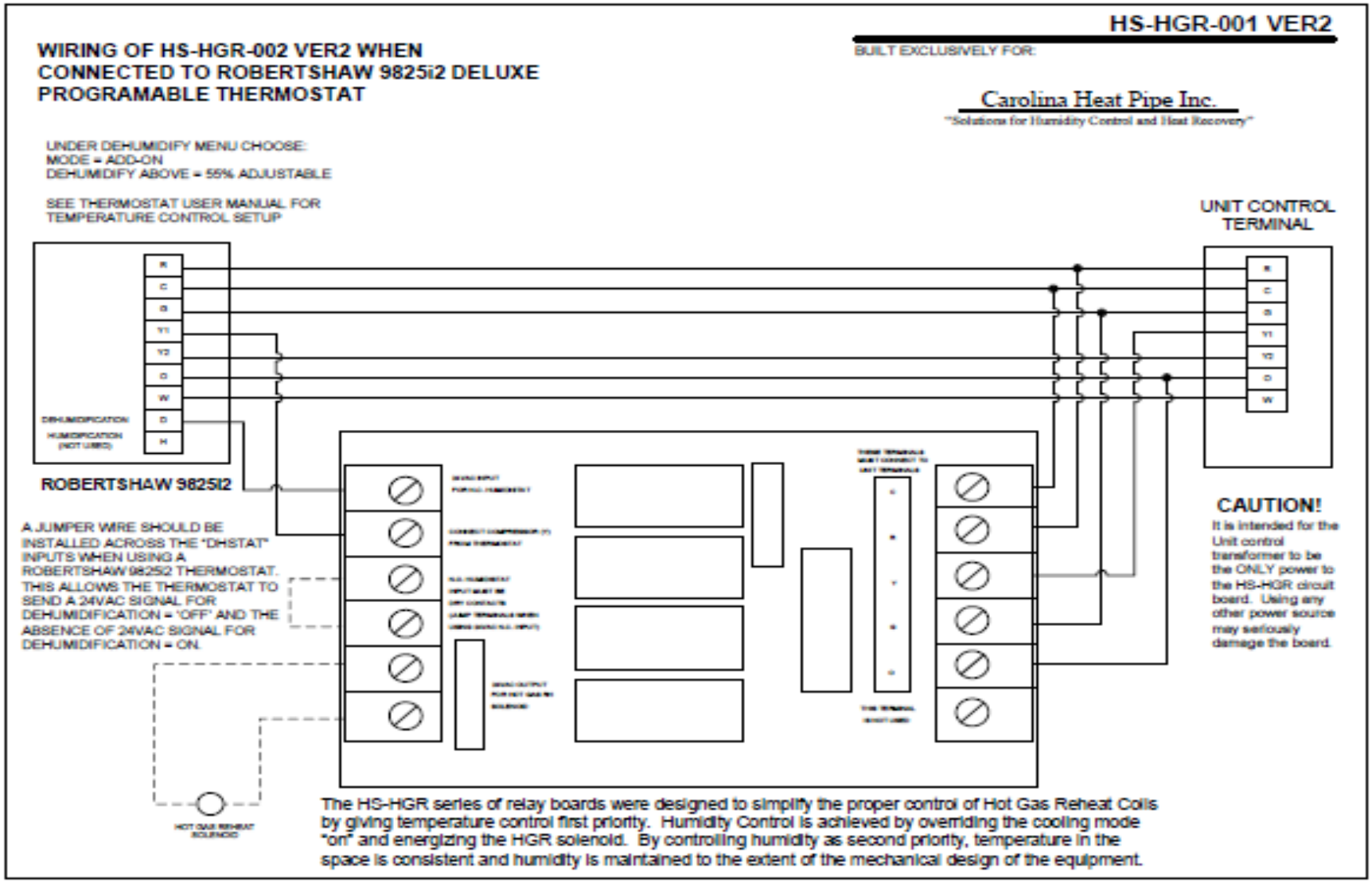

HS-HGR-001 VER2

BUILT EXCLUSIVELY FOR:

Carolina Heat Pipe Inc.

"Solutions for Humidity Control and Heat Recovery"

The HS-HGR series of relay boards were designed to simplify the proper control of Hot Gas Reheat Coils by giving temperature control first priority. Humidity Control is achieved by overriding the cooling mode "on" and energizing the HGR solenoid. By controlling humidity as second priority, temperature in the space is consistent and humidity is maintained to the extent of the mechanical design of the equipment.

CAUTION!

It is intended for the Unit control transformer to be the ONLY power to the HS-HGR circuit board. Using any other power source may seriously damage the board.

FOR N.C. DRY CONTACT CONTROL, SIMPLY RUN 24VAC THROUGH A NORMALY CLOSED SET OF CONTACTS AND TERMINATE TO THE "24VAC/N.C." TERMINAL.

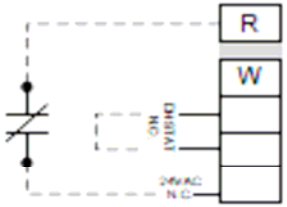

WHEN USING A SEPARATE DEHUMIDISTAT PLEASE FOLLOW THE WIRING GUIDES DETAILED HERE. NO EXTERNAL VOLTAGES ARE NEEDED. 24VAC IS TAKEN FROM THE BOARD THROUGH THE DEHUMIDISTAT CONTACTS AND BACK TO THE BOARD.

FOR N.O. DRY CONTACT CONTROL, CONNECT N.O. DEHUMIDISTAT TO "DHSTAT/N.O." TERMINALS WITH NO CONNECTION TO 24VAC/N.C.

Caution: The circuit board is designed for 24VAC. Voltages exceeding 24VAC MAY damage the components of the board. Make sure that external voltage sources are isolated through the use of relays if necessary.

WIRING OF HS-HGR-001 VER2 WHEN CONNECTED TO A STANDARD THERMOSTAT USING A STANDARD N.O. DEHUMIDISTAT

HS-HGR-001 VER2

BUILT EXCLUSIVELY FOR:

Carolina Heat Pipe Inc.

"Solutions for Humidity Control and Heat Recovery"

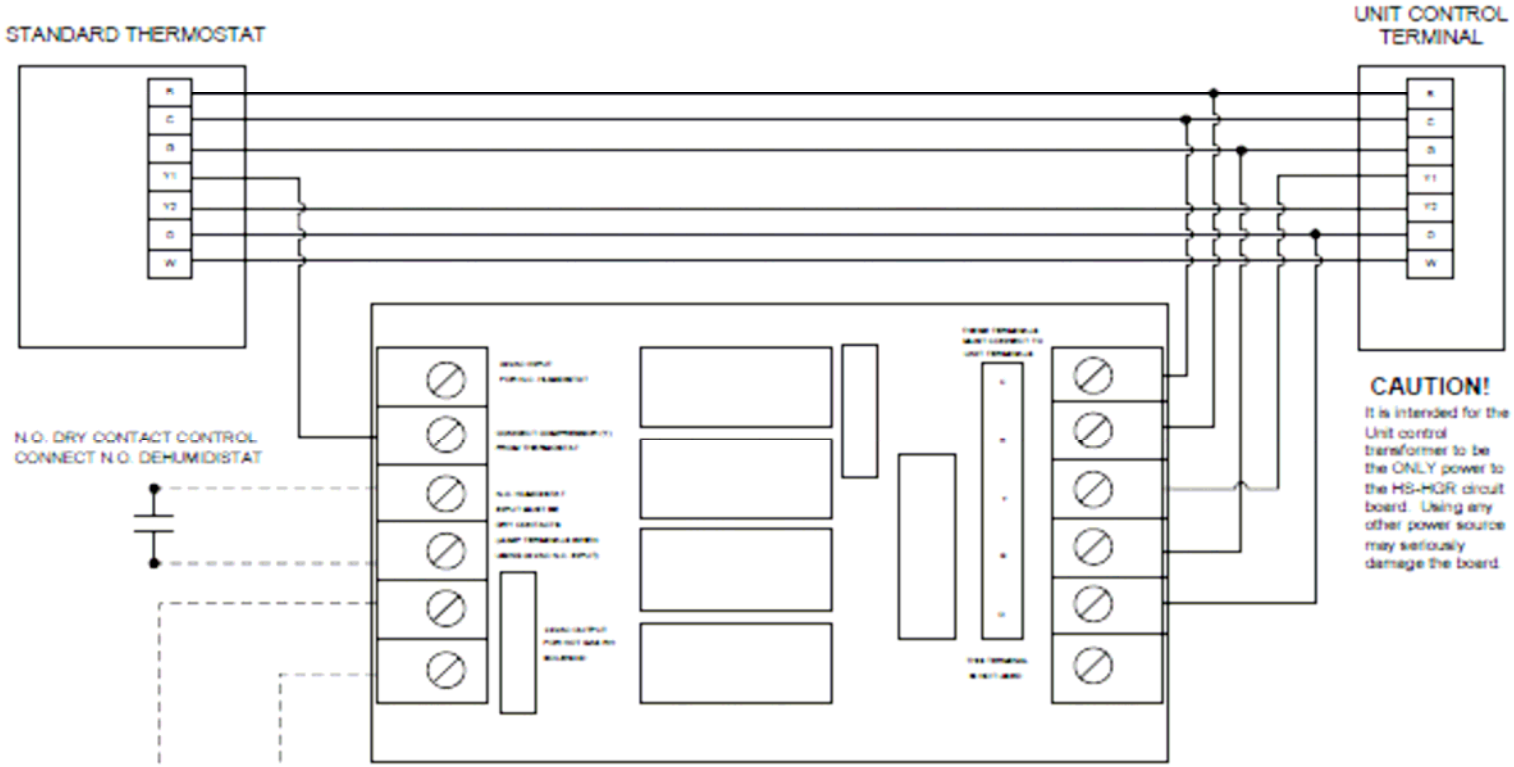

CAUTION!

It is intended for the Unit control transformer to be the ONLY power to the HS-HGR circuit board. Using any other power source may seriously damage the board.

The HS-HGR series of relay boards were designed to simplify the proper control of Hot Gas Reheat Coils by giving temperature control first priority. Humidity Control is achieved by overriding the cooling mode "on" and energizing the HGR solenoid. By controlling humidity as second priority, temperature in the space is consistent and humidity is maintained to the extent of the mechanical design of the equipment.

Dehumidification with TRAHP™ Model: ST Mach 1: Suggested Sequence of Control

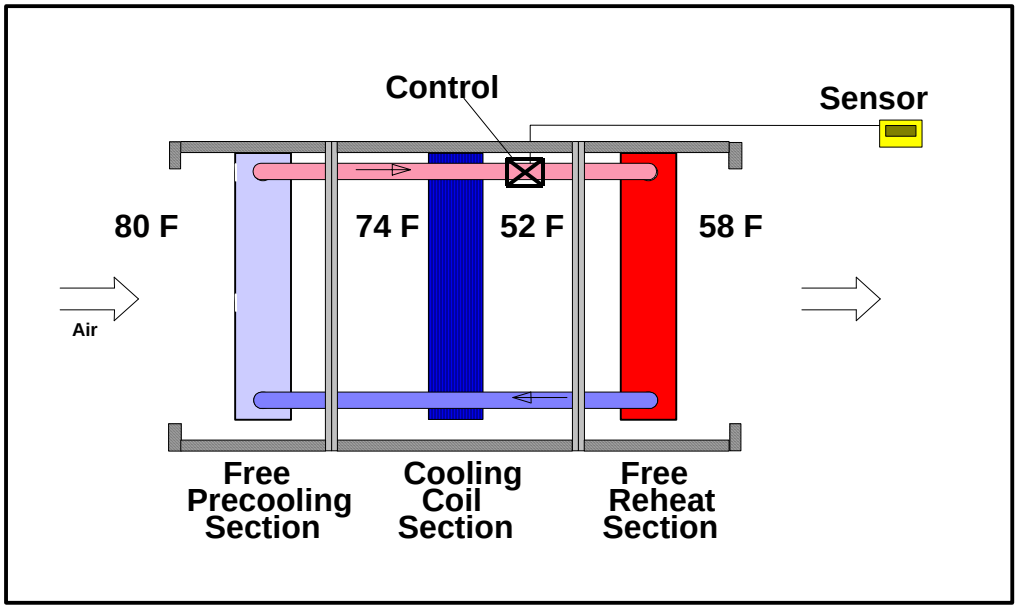

Control Technique for Improved Dehumidification

- The DDC control system or thermostat shall activate the chilled water valve or the compressor when a DX system is used to ensure the leaving air temperature of the cooling coil maintains the required dew point temperature.

- The room sensors are expected to modulate the TRAHP™ control valves to maintain the desired relative humidity while the air conditioning system continues to maintain the desired room temperature.

- Additional reheat may be used to supplement the reheat provided by the TRAHP™ system.

- In certain applications where an air handler feeds multiple conditioned zones it may be practical to consider controlling the amount of reheat provided by the TRAHP™ System in response to a humidistat located in the return duct. The humidistat could order an increase in the heat transfer from the precool coil to the reheat coil while proportionally closing the CW control valve to maintain dew point temperature control. An alternate strategy would be to reduce the TRAHP™ heat transfer in response to outside ambient temperature during peak cooling periods when maintaining space temperature is more important than maintaining the space humidity level.

Dehumidification
With
Controllable Hot Gas Reheat:
Suggested Sequence of Control

Call for cooling:

On temperature rise, compressor #1 is energized; if temperature continues to rise, compressor #2 is energized. As space temperature is satisfied, this sequence is reversed.

Call for dehumidification:

If humidity rises above Setpoint and there is no cooling call, compressor #1 is energized and the Hot Gas Reheat Solenoid is opened. For a two-compressor unit, both compressors may be required to ensure the evaporator coil is removing moisture while the HGRH coil is raising the supply air temperature. When the call for dehumidification is satisfied, the Hot Gas Reheat solenoids can be de-energized.

During dehumidification, the room thermostat will run the air conditioner longer to reduce humidity due to load from the HGRH coil and may be permitted to lower the temperature setpoint by 1 to 2 degrees below the cooling temperature setting. However, if the cooling temperature drops below this, the compressor must be stopped and the HGRH solenoid closed. The supply fan should also be stopped to prevent reintroducing moisture from the cooling coil.

Please note: Dehumidification only occurs when the compressors are running. The hot gas diverted from the condenser is an energy efficient method of reheating the supply air leaving the evaporator to provide air entering the duct at a lower relative humidity.

Call for heating

Cooling and dehumidifying hot gas reheat are locked out until the call for heating is satisfied.

Split System Heat Recovery TRAHP™: Suggested Sequence of Control

General

- The split system heat recovery TRAHP™ controller shall be enabled whenever the supply air is operating. The Heat Recovery System control valves shall normally be open and may be controlled in sequence to provide the required amount of heat recovery.
- The controller shall monitor air temperatures and index stages of heat recovery as desired.
- All stages of heat recovery shall be off during use of the economizer cycle.

Sequence

- When a heat recovery coil discharge air temperature is 75 deg. F and above all heat recovery control valves shall be opened allowing heat transfer to the exhaust air.
- When a heat recovery coil discharge temperature is between 52 deg. F and 75 deg. F all heat recovery control valves shall remain closed.
- Upon decreasing a heat recovery coil discharge air temperature (below 52 deg. F) all heat recovery control valves shall be staged open allowing heat recovery from exhaust air.

Frost Control

- The controller shall index stages of heat recovery to maintain an exhaust air discharge temperature above 35 deg. F. Upon a drop in discharge temperature below 40 deg. F the first stage of heat recovery shall be disabled. If the discharge temperature continues to drop, additional stages of heat transfer shall be disabled to maintain a minimum 35 deg. F exhaust air discharge temperature.

Vapor Line Temperature Control

- When required, may be used to avoid premature condensation of vapor or to regulate the amount of vapor transfer.

CDS

ELECTRIC EVAPORATOR CONTROL VALVES

The **CDS** valves are electronically operated step motor evaporator pressure regulating valves. Synchronized signals to the motor provide discrete angular movement, which translates into precise linear positioning of the valve piston. Valve pistons and ports are uniquely characterized, providing superb flow resolution and performance. The CDS valves are easily interfaced with micro-processor based controllers, including Sporlan supplied controllers.

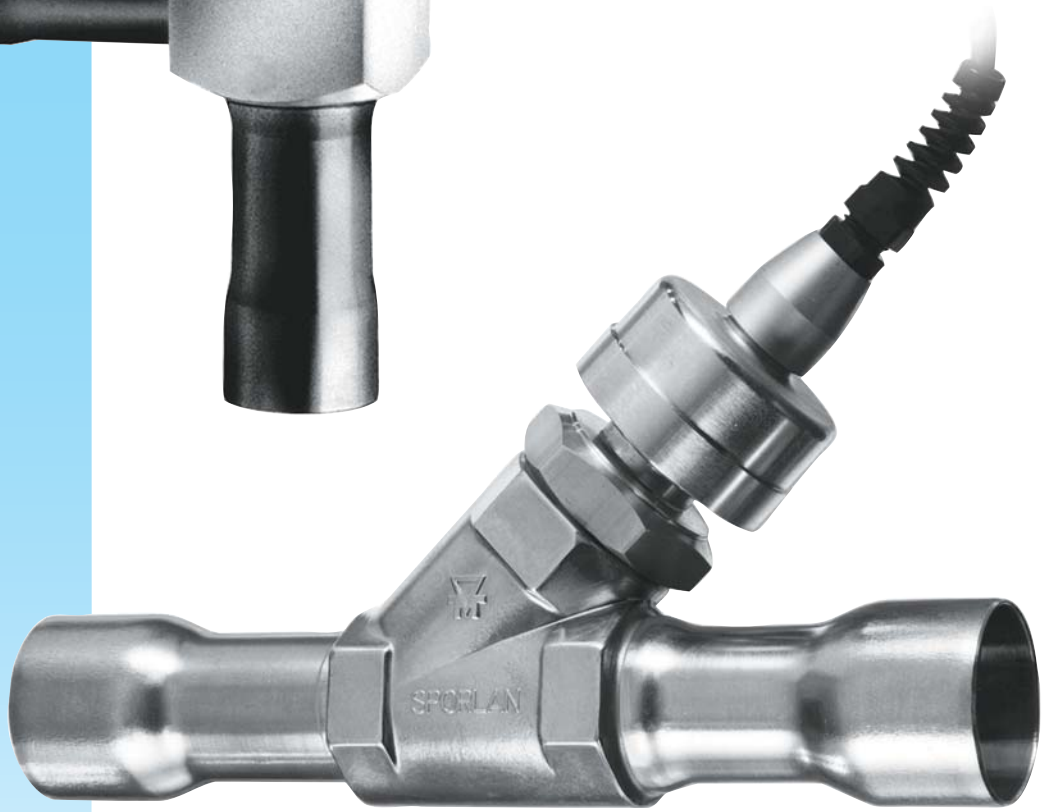

SPORLAN MECHATRONICS

FOR USE ON REFRIGERATION and/or AIR CONDITIONING SYSTEMS ONLY

Bulletin 100-40, November 2002 supersedes Bulletin 100-40, May 2000, and all prior publications.

10 FEATURES AND BENEFITS

- **Step motor operated for precise control**
- **High resolution drive assembly -** (.0000783 inches (.002 mm) per step)
- **Tight seating valve for suction applications**
- **Corrosion resistant materials used throughout**
- **Field proven reliability**
- **Low power consumption - 4 watts**
- **Balanced port design**
- **Compatibility tested with most CFC, HCFC and HFC refrigerants and oils**
- **Self lubricating materials used for long life**
- **High linear force output**

THE VALVES

The CDS valves are designed for precise and energy efficient control of evaporator temperatures. Proper temperature is obtained by regulating refrigerant flow in the evaporator in response to signals generated by an electronic controller and sensor combination. The valves are built around balanced ports which allow input power of only 4 watts, less than one quarter of the power used by older, heat motor and analog designs. When not actively stepping, power to the motor is removed for further energy savings. The 12 VDC step motors coupled to the integral gear reduction system, give the valves unparalleled accuracy and repeatability over the entire operating range.

Because the valves are powered by an external controller, no pilot lines or high to low side bleeds are required. When properly applied the CDS valves and controllers can replace standard mechanical evaporator pressure regulator (EPR) valves, suction stop solenoid valves, and conventional thermostats. Since these valves have a direct acting motor, they can be sized for minimal pressure drop.

The simple cartridge design permits all moving parts to be replaced as a unit, leaving the valve body in the line. This reduces the chance of leaks developing.

The CDS-9 was designed as a drop in replacement for the older CDS-8 valves now installed in many refrigerated cases. The CDS-9 can be used in place of the CDS-8 with no modifications to the electronic controller. The capacity of the CDS-9 when used with an older controller is the same as the CDS-8.

Sporlan CDS valves are currently available in nominal R-22 capacities from 5 to 35 tons (17 to 123 kW). The capacity tables on pages 5, 6 and 7 show actual capacities at specific conditions.

VALVE OPERATION

The CDS valves are driven by the electronically controlled rotation of a step motor (refer to Figure 1).

Figure 1

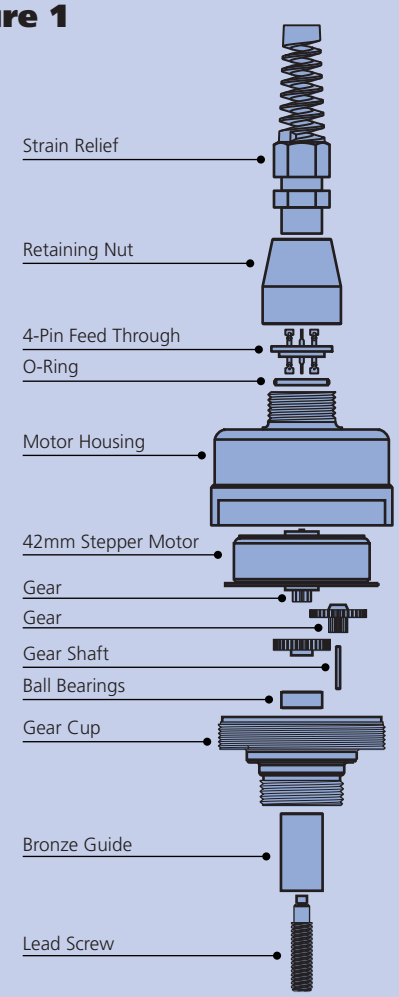

Figure 2

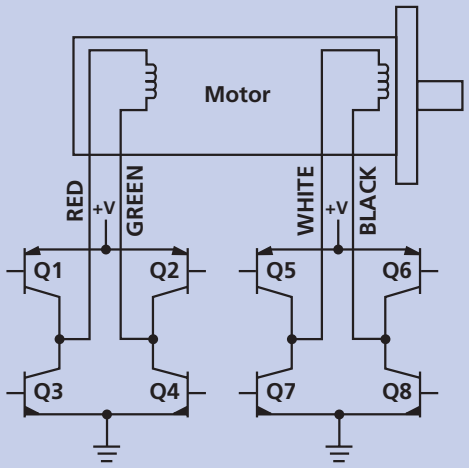

The step motor drives a gear train and lead screw to position a piston modulating flow through the valve's port.

The two-phase motor is driven in the bipolar mode. Two discrete sets of motor stator windings are powered in sequence to rotate the rotor 3.6 degrees per step. Polarity of the drive signal reverses for each step. The sequencing is accomplished electronically through the bipolar drive circuit shown in Figure 2. The drive transistors, Q1 through Q8, are electronically biased in pairs by the controller as shown in Table 1.

Table 1

BIPOLAR DRIVE SEQUENCE

CLOSE ↓	STEP	Q1-Q4	Q2-Q3	Q5-Q8	Q6-Q7	↑ OPEN
	1	ON	OFF	ON	OFF	
	2	ON	OFF	OFF	ON	
	3	OFF	ON	OFF	ON	
	4	OFF	ON	ON	OFF	
	1	ON	OFF	ON	OFF	

CDS valves have an operating stroke of 0.500 inches (12.7 mm) and 6386 steps of control; therefore, each step translates into .0000783 inches (.002mm) of travel.

All external parts of the valve are brass or copper and meet or exceed ASTM standard B-117 for corrosion resistance.

The motor is equipped with a hermetic cable connection and a ten-foot (3-meter) lead wire. Although ten-feet is the standard length, the lead can be supplied in a variety of lengths up to 40 feet (12 meters) to suit specific customer requirements. Unless otherwise specified, the terminal end of the wires will be supplied stripped and tinned.

NOTE: The 40-foot limit on the lead wire is because of voltage drop considerations. If a valve must be installed more than 40-feet from the controller, a short lead wire must be used with an extension of heavier (14-gauge) wire.

Total power consumption is 4 watts when operating a rate of 200 steps per second with standard L/R drive circuitry. Refer to the motor specifications shown on Page 3. Faster step rates may be obtained with proper "current limited chopper" type drives. Please contact Sporlan Valve Company for more information.

The CDS valves have a maximum rated pressure of 420 PSIG, (29 bar). Operating ambient temperature range is -50°F to 140°F (-45°C to 60°C) but temperatures of up to 250°F (120°C) may be used for dehydration.

APPLICATION

Sporlan Valve Company is not responsible for system design, any damage arising from faulty system design, or for misapplication of its products. If these valves are applied in any manner other than as described in this bulletin, the Sporlan warranty is void. Please contact your Sporlan Sales Engineer for assistance with your specific application. General drive circuitry is shown in Figure 2. It is the responsibility of the controller manufacturer to provide suitable drive circuitry and power supply. Sporlan Valve Company will assist where necessary, but accepts no liability for improper control of the valve. It is strongly suggested that power to the valve be disabled when not actively stepping. Conventional initialization routines, which include overdriving the motor to ascertain the zero step position, are acceptable. The valve should be completely closed on initial power up of the controller by inducing 7,500 steps in the closing direction. (Subsequent closing of the valve should include 10% more steps than would be required from the valve's calculated position.)

SPECIFICATIONS

MOTOR TYPE:
2-phase permanent magnet, 2 coil bipolar
SUPPLY VOLTAGE:
12 VDC, -5% +10%, measured at the valve leads
CONNECTIONS:
4 lead, 18 AWG, PVC insulation jacketed cable
PHASE RESISTANCE:
75 ohms per winding ± 10%
CURRENT RANGE:
.131 to .215 amps per winding (.262 to .439 amps with two windings energized depending on temperature)
MAXIMUM POWER:
4 watts
INDUCTANCE PER WINDING:
62 ± 20% MHz
REQUIRED STEP RATE:
200 steps per second, other rates must be tested and approved
NUMBER OF STEPS:
6386
RESOLUTION:
.0000783 inches/step (.002 mm/step)
TOTAL STROKE:
.50 inches (12.7 mm)
MAXIMUM ALLOWABLE INTERNAL LEAKAGE:
less than 400 cc/min. at 100 PSIG
MAXIMUM ALLOWABLE EXTERNAL LEAKAGE:
less than .10 oz./year at 300 PSIG (.2 gr./year at 20 bar)
MAXIMUM RATED PRESSURE (MRP):
610 PSIG (29 bar)
OPERATING TEMPERATURE RANGE:
-50 to 140°F. (-45°C to +60°C)
MAXIMUM DEHYDRATION TEMPERATURE:
250°F. (120°C)
COMPATIBILITY:
all common CFC, HCFC and HFC refrigerants and all common mineral, polyolester and alkylbenzene oils
MATERIALS OF CONSTRUCTION:
copper - fittings; brass - valve body, motor housing, and adapters; synthetic materials - seating and seals

SELECTION EXAMPLE

REFRIGERANT: R-22
CONDENSING TEMPERATURE: 110°F
LIQUID TEMPERATURE: 60°F
EVAPORATOR TEMPERATURE: 20°F
EVAPORATOR CAPACITY: 6 Tons

To select a valve for the system conditions listed above, look at the capacity tables on pages 5 through 7. The leftmost set of columns lists the capacities for the valves when used on R-22 systems. To apply a valve with a minimum pressure drop, the 0.5 PSI column should be used. Note that for an evaporator of 20°F, a CDS-17 with a capacity of 6.9 tons would be required for this application. A more economical approach would be to use the CDS-9 with a capacity of 7.8 tons at 2-PSI pressure drop if the higher pressure drop can be tolerated.

ORDERING INSTRUCTIONS

The CDS-9 is available in both a straight through and angle configuration. The CDS-16 is an angled valve and the CDS-17 is a straight through valve.

CDS	-	T	-	17	1-3/8 X 1-3/8 ODF	-	10	-	S	Angle
Controls Discharge Stepmotor		Optional Inlet Pressure Tap		Model Number	Fitting Size		Cable Length 10' standard, others available		S = Stripped and tinned cable ends. Custom Connectors available	Used only if angled configuration

CDS-9

Connections in Inches (mm)

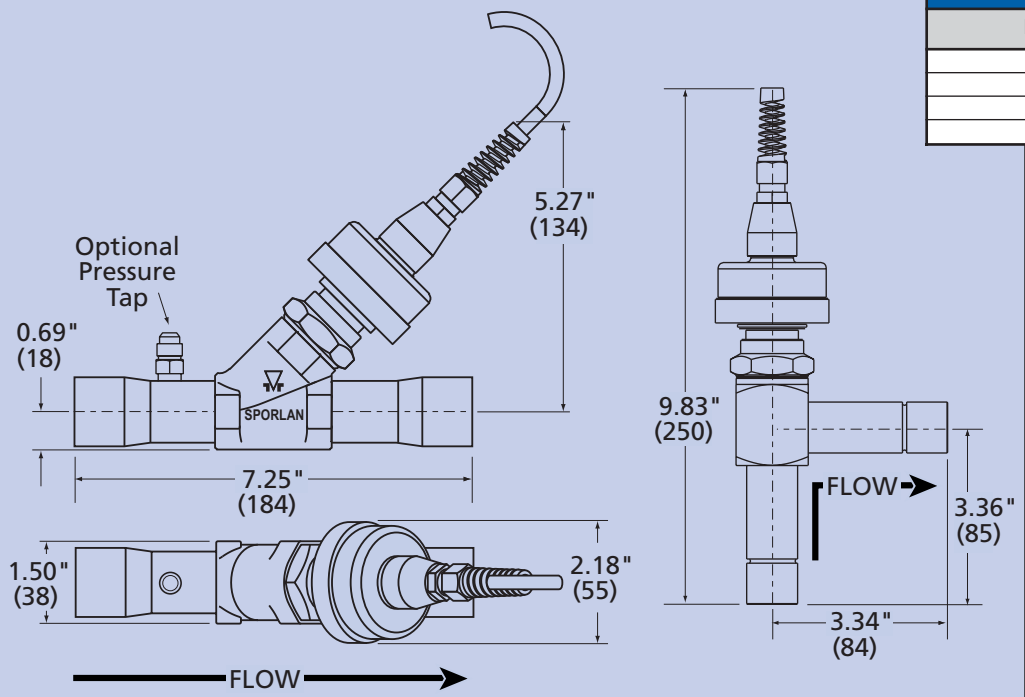

FITTINGS
5/8" ODF
7/8" ODF
1-1/8" ODF
1-3/8" ODF

EVAPORATOR TEMPERATURE (°F)	REFRIGERANT																	
	22						134a						404A/507					
	PRESSURE DROP ACROSS VALVE (PSI)																	
	.5	1	2	3	5	10	.5	1	2	3	5	10	.5	1	2	3	5	10
40	4.8	6.8	9.6	11.6	14.8	20.2	3.8	5.4	7.5	9.1	11.5	15.2	3.7	5.2	7.3	8.9	11.2	14.8
30	4.4	6.2	8.7	10.5	13.4	18.1	3.4	4.8	6.7	8.1	10.1	13.6	3.3	4.7	6.5	7.8	9.8	13.2
20	4.0	5.6	7.8	9.5	12.0	16.1	3.0	4.3	5.9	7.1	8.8	11.2	3.0	4.1	5.7	6.9	8.6	10.9
10	3.6	5.0	7.0	8.5	10.7	14.2	2.7	3.8	5.2	6.2	7.6	9.4	2.6	3.6	5.0	6.0	7.4	9.1
0	3.2	4.5	6.2	7.5	9.4	12.3	2.4	3.3	4.5	5.3	6.5	7.6	2.3	3.2	4.4	5.2	6.3	7.4
-10	2.8	4.0	5.5	6.6	8.2	10.5	2.1	2.8	3.9	4.6	5.4	6.0	2.0	2.8	3.8	4.4	5.2	5.8
-20	2.5	3.5	4.9	5.8	7.1	8.8	1.8	2.4	3.3	3.8	4.4	4.6	1.7	2.4	3.2	3.7	4.3	4.4
-30	2.2	3.1	4.2	5.0	6.1	7.1	1.5	2.1	2.7	3.1	3.4	3.4	1.5	2.0	2.7	3.0	3.3	3.3

Ratings based on 60°F liquid and 25°F superheated vapor.

EVAPORATOR TEMPERATURE (°C)	REFRIGERANT																	
	22						134a						404A/507					
	PRESSURE DROP ACROSS VALVE (BAR)																	
	.03	.07	.14	.21	.34	.68	.03	.07	.14	.21	.34	.68	.03	.07	.14	.21	.34	.68
5.0	16.9	23.8	33.4	40.7	51.8	70.8	13.4	18.9	26.4	31.9	40.2	53.2	13.0	18.3	25.6	31.0	39.0	51.6
0.0	15.3	21.6	30.3	36.8	46.7	63.4	12.0	16.8	23.5	28.3	35.4	47.6	11.6	16.3	22.7	27.4	34.3	46.2
-5.0	13.9	19.5	27.3	33.1	41.9	56.3	10.6	14.9	20.7	24.9	30.8	39.3	10.3	14.5	20.1	24.1	29.9	38.1
-10.0	12.5	17.5	24.5	29.6	37.3	49.5	9.4	13.1	18.1	21.7	26.6	32.8	9.1	12.7	17.6	21.0	25.8	31.8
-15.0	11.2	15.6	21.8	26.3	33.0	43.0	8.2	11.4	15.8	18.7	22.6	26.7	8.0	11.1	15.3	18.1	21.9	25.9
-20.0	9.9	13.9	19.3	23.2	28.8	36.8	7.2	9.9	13.5	15.9	18.9	20.9	7.0	9.6	13.1	15.4	18.3	20.2
-25.0	8.8	12.3	17.0	20.3	25.0	30.8	6.2	8.5	11.5	13.3	15.4	16.0	6.0	8.3	11.1	12.9	14.9	15.5
-30.0	7.7	10.8	14.8	17.5	21.2	25.0	5.3	7.3	9.6	11.0	12.0	12.0	5.2	7.1	9.3	10.6	11.6	11.7

Ratings based on 16°C liquid and 14C° superheated vapor.

CDS-16 – ANGLE

Connections in Inches (mm)

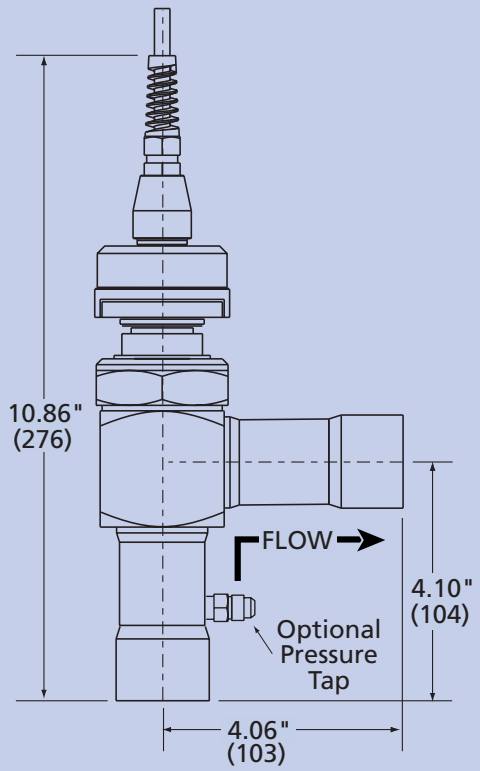

FITTING
1-3/8" ODF

EVAPORATOR TEMPERATURE (°F)	REFRIGERANT																			
	22							134a							404A/507					
	PRESSURE DROP ACROSS VALVE (PSI)																			
	.5	1	2	3	5	10	20	.5	1	2	3	5	10	20	.5	1	2	3	5	10	20
40	6.4	9.0	12.6	15.4	19.6	26.9	35.8	5.1	7.1	10.0	12.1	15.3	20.4	25.5	6.0	8.4	11.8	14.4	18.4	25.4	34.2
30	5.8	8.1	11.4	13.9	17.7	24.2	31.7	4.5	6.3	8.9	10.7	13.5	17.7	21.5	5.4	7.6	10.6	12.9	16.5	22.7	30.1
20	5.2	7.4	10.3	12.5	15.9	21.5	27.7	4.0	5.6	7.8	9.4	11.8	15.2	17.6	4.8	6.8	9.5	11.6	14.7	20.1	26.3
10	4.7	6.6	9.3	11.2	14.2	19.0	23.9	3.5	5.0	6.9	8.2	10.2	12.9	13.9	4.3	6.0	8.5	10.3	13.0	17.7	22.7
0	4.2	5.9	8.3	10.0	12.5	16.6	20.1	3.1	4.3	6.0	7.1	8.7	10.6	10.9	3.8	5.3	7.5	9.1	11.5	15.4	19.3
-10	3.7	5.3	7.3	8.8	11.0	14.3	16.5	2.7	3.8	5.1	6.1	7.3	8.5	8.5	3.4	4.7	6.6	8.0	10.0	13.2	16.0
-20	3.3	4.6	6.4	7.7	9.6	12.1	13.1	2.3	3.2	4.4	5.1	6.0	6.5	6.5	3.0	4.1	5.8	6.9	8.7	11.2	12.9
-30	2.9	4.1	5.6	6.7	8.2	9.9	10.2	2.0	2.8	3.7	4.3	4.8	4.9	4.9	2.6	3.6	5.0	6.0	7.4	9.3	10.0

Ratings based on 60°F liquid and 25°F superheated vapor.

EVAPORATOR TEMPERATURE (°C)	REFRIGERANT																			
	22							134a							404A/507					
	PRESSURE DROP ACROSS VALVE (BAR)																			
	.03	.07	.14	.21	.34	.68	1.36	.03	.07	.14	.21	.34	.68	1.36	.03	.07	.14	.21	.34	.68	1.36
5.0	22.3	31.4	44.1	53.9	68.6	94.2	125.3	17.7	24.9	34.9	42.4	53.6	71.4	89.3	20.9	29.4	41.3	50.4	64.4	88.9	119.7
0.0	20.2	28.5	39.9	48.7	62.0	84.7	111.0	15.8	22.2	31.0	37.5	47.3	62.0	75.3	18.8	26.5	37.1	45.2	57.8	79.5	105.4
-5.0	18.3	25.7	36.1	43.8	55.7	75.3	97.0	14.0	19.7	27.4	33.0	41.3	53.2	61.6	16.8	23.7	33.3	40.6	51.5	70.4	92.1
-10.0	16.4	23.1	32.4	39.2	49.7	66.5	83.7	12.4	17.3	24.0	28.8	35.7	45.2	48.7	15.0	21.1	29.6	36.1	45.5	62.0	79.5
-15.0	14.7	20.7	28.9	34.9	43.8	58.1	70.4	10.9	15.2	20.9	24.9	30.5	37.1	38.2	13.3	18.7	26.2	31.8	40.3	53.9	67.6
-20.0	13.1	18.4	25.6	30.8	38.5	50.1	57.8	9.5	13.2	18.0	21.3	25.6	29.6	29.6	11.8	16.5	23.1	27.9	35.0	46.2	56.0
-25.0	11.6	16.2	22.5	27.0	33.4	42.4	45.9	8.2	11.3	15.3	18.0	21.1	22.6	22.6	10.3	14.5	20.1	24.3	30.3	39.2	45.2
-30.0	10.2	14.2	19.6	23.4	28.6	34.8	35.7	7.0	9.7	12.9	14.9	16.8	17.1	17.1	9.0	12.6	17.4	20.9	25.8	32.5	35.0

Ratings based on 16°C liquid and 14C° superheated vapor.

CDS-17

Connections in Inches (mm)

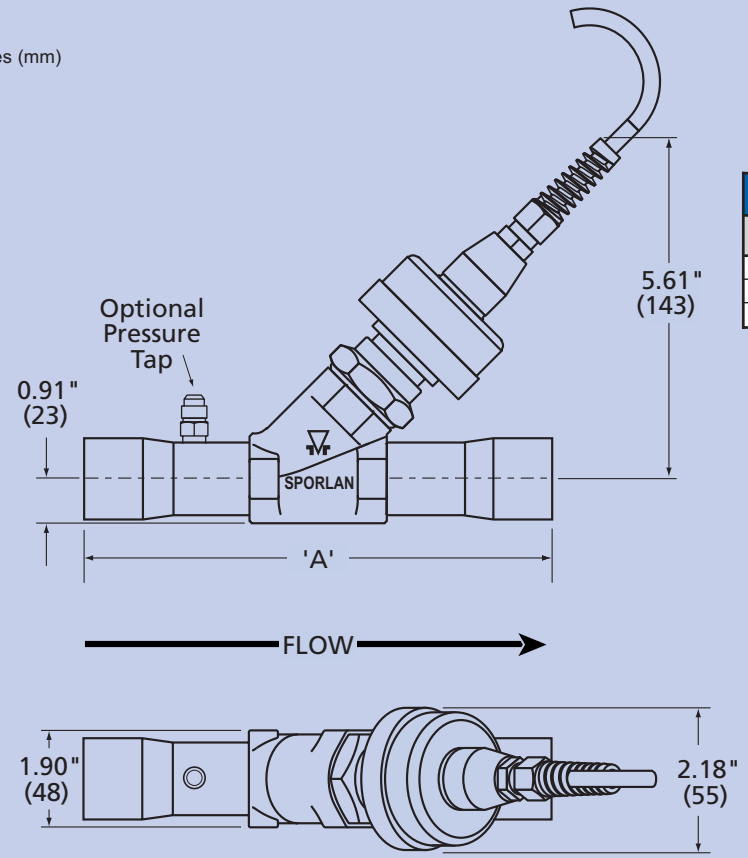

FITTING	'A'
1-3/8" ODF	9.88" (251)
1-5/8" ODF	9.88" (251)
2-1/8" ODF	10.62" (270)

EVAPORATOR TEMPERATURE (°F)	REFRIGERANT																	
	22						134a						404A/507					
	PRESSURE DROP ACROSS VALVE (PSI)																	
	0.5	1	2	3	5	10	0.5	1	2	3	5	10	0.5	1	2	3	5	10
40	8.3	11.6	16.1	19.5	24.9	35.6	6.7	9.3	12.9	15.7	20.2	26.7	7.7	10.7	14.9	18.1	23.1	33.7
30	7.6	10.5	14.7	17.8	22.7	31.9	6.0	8.3	11.6	14.1	17.8	23.1	7.0	9.7	13.5	16.4	20.9	30.0
20	6.9	9.6	13.3	16.2	20.6	28.3	5.4	7.4	10.4	12.5	15.5	19.7	6.3	8.7	12.2	14.7	18.8	26.5
10	6.2	8.7	12.1	14.6	18.8	24.9	4.8	6.6	9.2	10.9	13.4	16.5	5.6	7.8	10.9	13.2	16.9	23.2
0	5.6	7.8	10.9	13.2	16.6	21.6	4.2	5.8	7.9	9.4	11.4	13.4	5.0	7.0	9.7	11.8	15.2	20.1
-10	5.0	7.0	9.7	11.7	14.5	18.5	3.7	5.1	6.8	8.0	9.5	10.5	4.5	6.2	8.6	10.5	13.2	17.2
-20	4.5	6.2	8.7	10.2	12.5	15.5	3.2	4.5	5.8	6.7	7.7	8.0	3.9	5.5	7.6	9.2	11.4	14.5
-30	4.0	5.5	7.4	8.8	10.7	12.6	2.8	3.7	4.8	5.5	6.0	6.1	3.5	4.8	6.7	7.9	9.7	11.9

Ratings based on 60°F liquid and 25°F superheated vapor.

EVAPORATOR TEMPERATURE (°C)	REFRIGERANT																	
	22						134a						404A/507					
	PRESSURE DROP ACROSS VALVE (BAR)																	
	.03	.07	.14	.21	.34	.68	.03	.07	.14	.21	.34	.68	.03	.07	.14	.21	.34	.68
5.0	29.1	40.5	56.3	68.3	87.2	124.6	23.4	32.5	45.3	55.0	70.6	93.6	27.0	37.5	52.2	63.4	80.9	117.9
0.0	26.5	36.9	51.3	62.3	79.5	111.5	21.0	29.2	40.6	49.3	62.2	81.0	24.4	33.9	47.2	57.3	73.1	104.9
-5.0	24.1	33.5	46.6	56.6	72.2	99.0	18.7	26.0	36.3	43.7	54.2	69.1	22.0	30.6	42.5	51.6	65.8	92.7
-10.0	21.8	30.3	42.2	51.2	65.6	87.1	16.6	23.1	32.2	38.1	46.8	57.8	19.7	27.4	38.1	46.3	59.0	81.3
-15.0	19.6	27.3	38.0	46.1	58.0	75.7	14.7	20.5	27.6	32.8	39.8	47.0	17.6	24.4	34.0	41.3	53.2	70.5
-20.0	17.6	24.4	34.0	40.8	50.7	64.7	12.9	18.0	23.8	28.0	33.2	36.7	15.6	21.7	30.2	36.6	46.3	60.3
-25.0	15.7	21.8	30.3	35.7	43.9	54.2	11.3	15.7	20.2	23.5	27.0	28.1	13.8	19.1	26.7	32.1	39.8	50.7
-30.0	13.9	19.3	26.0	30.8	37.3	44.0	9.8	12.8	16.9	19.2	21.2	21.2	12.1	16.8	23.4	27.6	33.9	41.7

Ratings based on 16°C liquid and 14C° superheated vapor.

TYPICAL INSTALLATIONS

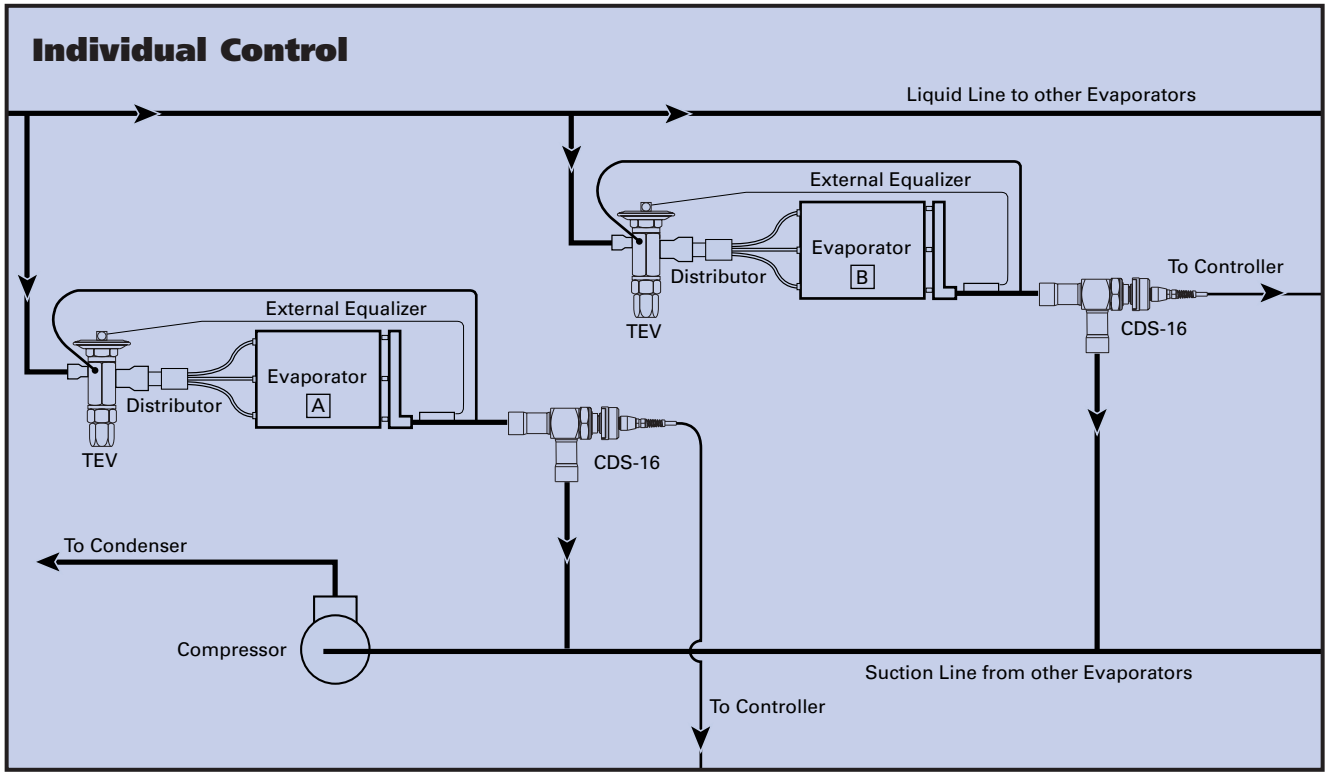

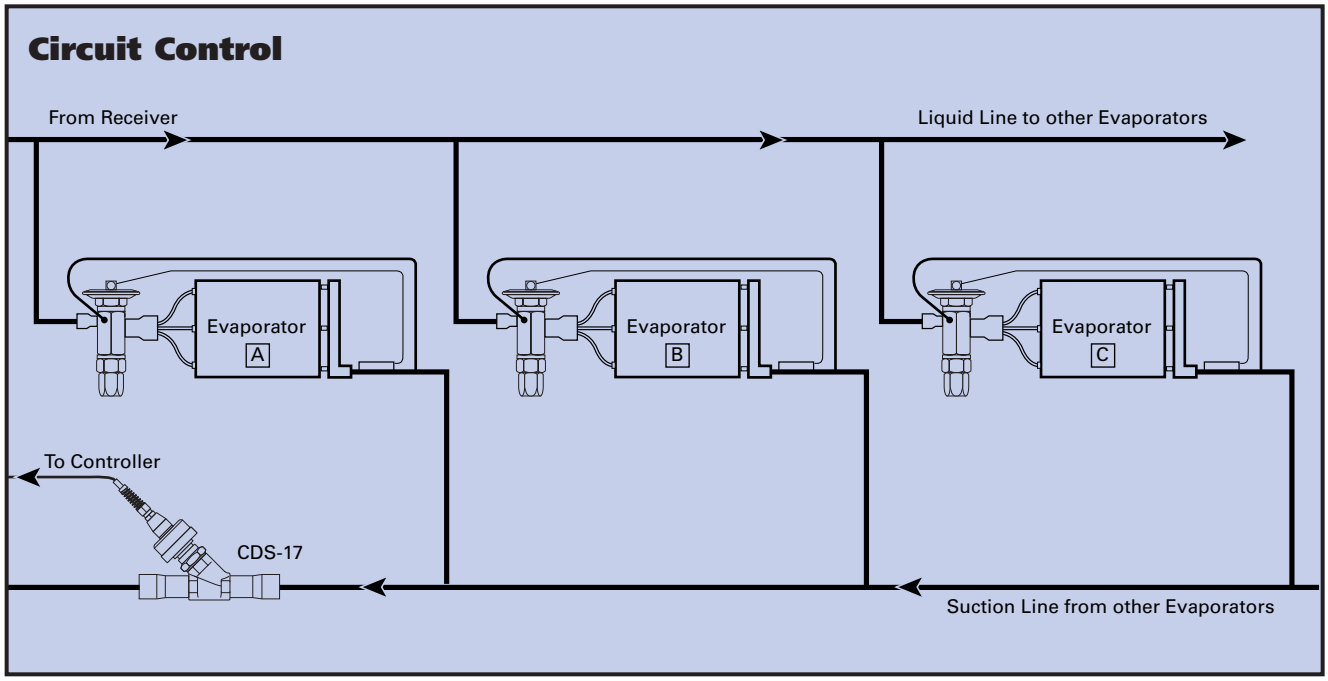

SPORLAN VALVE COMPANY
206 LANGE DRIVE • WASHINGTON, MO 63090
636-239-1111 • FAX 636-239-9130
www.sporlan.com

IB SERIES

INTERFACE BOARDS

The **IB Series** interface boards have been developed as economical compliments to the TCB temperature control boards. The **IB Series** is available in three basic models, IB1, IB3 and IB6, and each can accept 4-20 milliamp or 0-10 volt DC analog input signals. All are designed to allow externally supplied control signals to control one or two Sporlan step motor valves including CDS evaporator control valves, SDR electric discharge bypass valves and SEI/SER/SEH electric expansion valves.

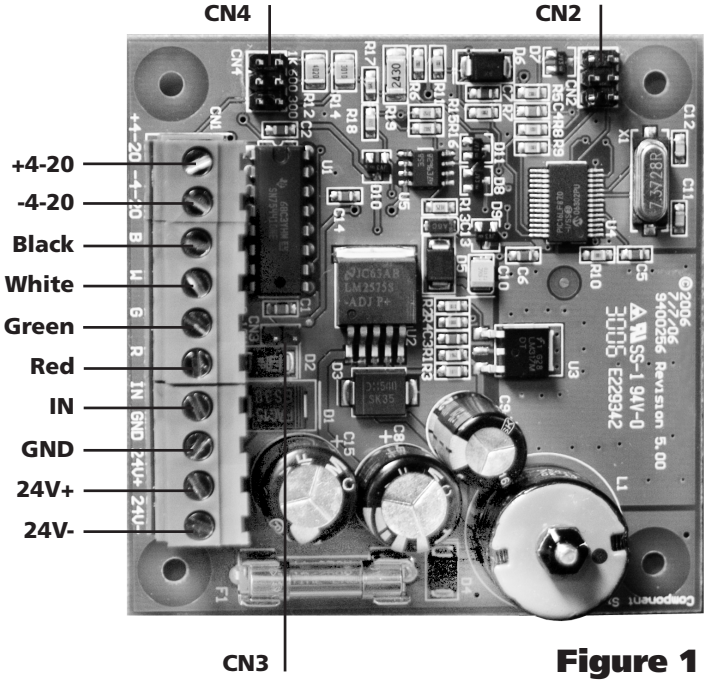

Figure 1

The IB1 is programmed to control any Sporlan step motor valve having 1596 steps of resolution, the IB3 is used with valves having 3193 steps and the IB6 is used on valves with 6386 steps. "Q" denotes quick response for special applications. Please contact Sporlan Valve Company. Refer to Ordering Information, page 2.

CONFIGURE the BOARD

When used with a 0-10 volt input signal, a jumper should be placed on the pins labeled CN3 as shown in the Figure 1. This is the default jumper position. The impedance for this input is 40 k ohms.

When used with a 4-20 milliamp input, the board must be matched to the impedance of the external controller. Refer to the manufacturer's literature and choose the jumper position on CN4 as shown Figure 1. Possible impedance selections on CN4 are 1,000 ohms (1k), 600 ohms, and 300 ohms.

Choose “Open on Rise” or “Close on Rise” operation using the middle two pins on jumper CN2. The jumper is stored on one pin only and will cause the valve to open as input signal rises, i.e. valve is closed at 0 volts or 4 milliamps and fully open at 10 volts or 20 milliamp input. By placing the jumper on both pins, the operation is reversed so that the valve will be fully open at 0 volts or 4 milliamps. Other pins on CN2 have been clipped at the factory and are not used for operation of the valve.

MOUNT the BOARD

The **IB Series** is based on a 3.0" x 3.0" circuit card with 0.125" mounting holes, 0.25" from each corner. If desired, these mounting holes may be used with customer supplied non-metallic standoffs. The **IB Series** does, however, come supplied with a length of snap-in plastic track. The track should be mounted in the desired location and one side

SPORLAN MECHATRONICS

WIRING CONNECTIONS

From left to right when the board is oriented with the terminal strip across the bottom.

- **+4-20 -** connection for the positive leg of a 4-20 milliamp or 0-10 volt signal
- **-4-20 -** connection for negative leg of a 4-20 milliamp or 0-10 volt signal
- **B -** black wire from valve, or both valves when two valves are used
- **W -** white wire from valve, or both valves when two valves are used
- **G -** green wire from valve, or both valves when two valves are used
- **R -** red wire from valve, or both valves when two valves are used
- **IN -** from external pumpdown switch or relay. See wiring instructions.
- **GND -** to external pumpdown switch or relay. See wiring instructions.
- **24V-1 -** from 24 volt, 40 VA transformer. See wiring instructions.
- **24V-2 -** from 24 volt, 40 VA transformer. See wiring instructions.

of the IB engaged in the upper groove in the track. The IB is then pushed down so that the opposite side of the board snaps into the uppermost groove in the opposite side of the track. The board may be mounted in the orientation most convenient for wiring. Location should be dry, protected and close to the 24 volt power supply and external controller.

WIRING INSTRUCTIONS and CAUTIONS

Use the chart above as a guide for wire connections. Certain precautions must be taken in wiring and operation of the **IB Series**.

1. The 24 volts must be supplied by a 30 VA or 40 VA transformer not used for any other purpose. In addition, the secondary winding of the transformer must not be connected to chassis ground. A single transformer may be used for multiple IB boards. If this feature is used, one leg of the 24 volt supply must be connected to all of the IB boards at the 24+ terminal. The other leg of the 24 volt supply must be connected to all of the IBs at the 24- terminal. Please refer to Figure 2.

   Incorrect wiring will cause the fuse to fail, a spare fuse is included and may be replaced with any 1 amp 250 volts delay fuse type GMC1 or equivalent. Wiring should be corrected before replacing the fuse.

2. The primary input of the transformer should be protected by Metal Oxide Varister (MOV) surge suppressors, supplied with the IB. For protection from electrical transients, connect one MOV between one leg of the input voltage of the 24 VAC transformer and earth ground. Connect a second MOV between the other leg of the input voltage of the 24 VAC transformer and earth ground. See Figure 2.

Figure 2

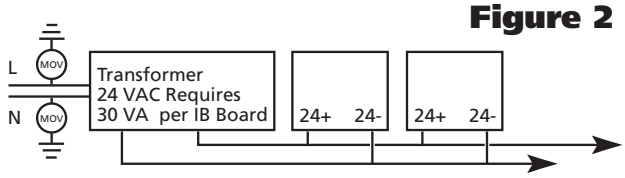

3. The pumpdown terminals must be supplied with a "dry" contact from a switch or relay. No external power should be applied to these terminals.

OPERATION and TROUBLESHOOTING

When properly configured and installed the **IB Series** requires no maintenance. They incorporate a number of operational features to assure trouble free service. On power-up the board will initialize by giving the valve a large number of steps to assure that the valve is fully shut. The routine will require approximately 8 seconds for the IB1, 16 seconds for the IB3 and 32 seconds for the IB6. The valve will not respond to input signals during this time.

If the valve is required to shut during operation, the pumpdown terminals should be used. When given a pumpdown signal, the board will shut the valve immediately and overdrive by 250 steps to reset valve position. On removal of the pumpdown signal the valve will resume position as dictated by the external control signal.

If power is lost to the IB or wire to the valve severed, the valve will remain in its last position. Solenoid valves may be desired before the step motor valve on critical applications.

To force the valve shut during operation for test purposes, simply remove the jumper from CN4 or CN3, depending on configuration. To resume normal operation, replace the jumper.

To allow for component tolerances, the IB will shut the valve when the input signal reaches 4.2 milliamps or .5 volts depending on the configuration.

The IB can power one or two valves. The valves will operate simultaneously and will open and close by the same number of steps. Valve wires must be connected exactly the same for both valves.

ORDERING INFORMATION

MODEL	PART #	STEPS	USED on VALVES
IB1	952955	1596	SEI .5 -11, SER
IB3	952956	3193	SDR-3, -3X
IB6	952957	6386	CDS, SDR-4
IB1Q	952958	1596	SEI .5 -11, SER
IB3Q	952959	3193	SEI-30
IB6Q	952960	6386	SEI-50, SEH

Sporlan Division
Parker Hannifin Corporation
206 Lange Drive
Washington, MO 63090
636-239-1111 • FAX 636-239-9130
www.sporlan.com

VI. Energy Savings Calculations

Page

Formulas for Energy Savings Calculations	VI-1
Calculations for Humidity Control TRAHP™	VI-3
Calculations for Subcool Reheat	VI-5
LEED Credit Calculations	VI-7
Commodity Market Energy Credits	VI-8
Improved EER Calculation	VI-9
Heat Recovery Sample Energy Savings Benefit	VI-10

Formulas for Energy Savings Calculations

Problem: Determine the energy savings of a 4,000-CFM system with a cooling EER of 12 where the Sensible Heat Pipe Thermosyphon is used in place of electric reheat to provide 7.2 F of reheat. Annual operating hours is 3,500 and electrical costs are $0.08 per kWh including demand charges.

1.0 Determine reheat energy savings

1.1 Determine reheat BTUH:

CFM x 1.08 delta-T reheat = BTUH of reheat

4,000 x 1.08 x 7.2 = 31,104 BTUH

1.2 Determine KW demand savings for reheat:

Reheat BTUH / 3,413 BTU per KW = KW demand savings for reheat

31,104 / 3,413 = 9.1 KW

1.3 Determine kWh savings for reheat:

KW demand savings for reheat x operating hours = annual kWh savings

9.1 x 3,500 = 31,850 kWh annual savings for reheat

2.0 Determine cooling energy savings:

Note: The precooling and reheat energy is the same.

2.1 Determine KW demand savings for cooling:

Precooling BTUH / (EER * 1,000) = KW demand savings for cooling

31,104 / 12,000 = 2.6 KW demand savings

2.2 Determine kWh savings for cooling:

KW demand savings for cooling x operating hours = annual kWh savings

2.6 KW x 3,500 hours = 9,100 kWh annual savings for cooling

3.0 Determine total KW and kWh savings:

2.6 KW cooling
9.1 KW reheat
11.7 KW total demand reduction

9,100 kWh for cooling
31,850 kWh for reheat
40,950 total annual savings

4.0 Determine total annual operating cost savings:

Total annual kWh savings x cost per kWh = annual operating cost savings

40,950 x $0.08 = $3,276.00 or $0.82 per CFM

Calculations
for Humidity Control Thermosyphon Heat Pipe Heat Exchangers (TRAHP)

Sample System

unit	CFM	OA	T	W/O HPHE Entr cool coil	T	W/O HPHE Lvg cool coil
AHU-1	10217	2620		82.3		52.8
AHU-2	2137	410		81.2		52.7
AHU-3	5669	835		83.1		55.3
AHU-4	0	0		0		0
total	18023	3865		82.2		53.6

delta T x Efficiency of HPHE=Delta T of Heat Pipe

CFM x 1.08 x Delta T=BTUH (Precooling and reheating by Heat Pipes

	CFM	cons	Delta T	BTUH
	10217	1.08	8.85	97654
	2137	1.08	8.55	19733
	5669	1.08	8.34	51062
	0	1.08	0	0
TOTAL	18023			168449

REHEAT Available From HPHE,s @EER 12

KW= BTUH/12x1000 14.04 KW

If gas reheat used:

Therms=BTUH/100000 1.68 Therms/HR

For a 75% System efficiency 2.25 Therms/HR

If Strip Reheat Used :

KW=BTUH/3413 49.36 KW

Summary

Demand Reduction of cooling Load 14 Tons

Demand Reduction in Reheat if Natural Gas Use 2 Therms/HR

if Heat Strip Used 49 KW

Other New Installation Possible Savings

If Electric Strip Reheat @ .25/CFM

If Hot Water Reheat @ .50/ CFM

Annual Savings Calculation

Calculations
for Humidity Control Thermosyphon Heat Pipe Heat Exchangers (TRAHP)

Approximate installed cost of HPHE's				$33,793			
	Operating Cost Annual savings based o				4500	Hours/yr.	
Natural	Gas consumption to replace Reheat from HPHE's						
	Therms/hr	Hr./Year	Cost/Therm			Annual Cost	
	2.25	4500	$0.65			$6,570	
Electric Load if Strip Reheat is used						Annual Cost	
	KW	Hr./Year	Cost/KWH				
	49.36	4500	$0.06		$13,992		
Electrical Load Cooling							
	KW	Hr./Year	Cost/KWH				
	14.04	4500	$0.06			$3,980	
Total annual cost for natural gas reheat						$10,549	
Total annual cost for strip reheat					$17,972		
Payback Period over natural gas						3.20	Years
Payback Period over strip reheat					1.88	Years	
Return on Investment					53%	31%	

Calculation for
Subcool Reheat

Project	100% Outside Air with Dx Heat Pump				Project#	CHP00-102	
Original Heat Pump Capacity 15 -Tons					15	Tons	
				W/O subcool		W subcool	
Heat Pump	BTUH	CFM	Constant	h		h	delta h
Tonnage	Total	supply					
HP-1	192,000	2700	4.5	15.8025		18.96296	3.1605
BTUH = 4.5x CFMxdelta h							
	38400	increase due to subcooling of refrigerant					
HP-1	230400	Total new capacity of heat pump during cooling operatio					
		due to subcooling of refrigerant					
	Reheat	Available	From Subcool of refrigerant @EER 10				
	KW= BTUH/10x1000			4.13	KW		
	If gas reheat used:						
	Therms=BTUH/100000			0.38	Therms/Hr		
	For a 75% System efficiency			0.51	Therms/Hr		
	If Strip Reheat Used :						
	KW=BTUH/3413			11.25	KW		
				Summary			
Demand Reduction of cooling Load					4	Tons	
Demand Reduction in Reheat			if Natural Gas Use		1	Therms/Hr	
			if Heat Strip Used		11	KW	
Other New Installation Possible Savings							
	If Electric Strip Reheat @ .25/CFM						
	If Hot Water Reheat @ .50/ CFM						
		Annual Savings Calculation					
Installed cost of Subcool & Controllable Hot Gas Reheat						$5,250	

Calculation for
Subcool Reheat

	Operating Cost Annual Savings based o				4500	Hours/yr	
Natural Gas consumption to Replace Reheat from HPHE's							
	Therms/hr	Hrs/Year	Cost/Therm			Annual Cost	
	0.51	4500	$0.65			$1,498	
Electrical Load Cooling							
	KW	Hrs/Year	Cost/KWH				
	4.13	4500	$0.06			$1,171	
Total Annual Cost						$2,668	
Payback Period			1.97	Years			
Return on Investment			51%				

Carolina Heat Pipe Inc.

- Humidity Control
- Heat Recovery

"The Humidity Control Specialists"

Carolina Heat Pipe Solutions
Can Gain Credits and Points
Under LEED Version 2.1:

Points	Prerequisite or Credit
	Energy & Atmosphere
1	Minimum Energy Performance
1	CFC Reduction in HVAC&R
1-10	Optimize Energy Performance
1-3	Renewable Energy
1	Ozone Protection
1	Measurement & Verification
	Materials and Resources
1-2	Regional Materials
	Indoor Environmental Quality
1	Minimum IAQ Performance
1	Increase Ventilation Effectiveness
1	Thermal Comfort-ASHRAE
1	Thermal Comfort-PMS
	Innovation in Design
1-4	Innovation in Design
12-27	**TOTAL POSSIBLE POINTS**

LEED

LEED LEADERSHIP IN ENERGY & ENVIRONMENTAL DESIGN

ASHRAE Southern Piedmont Chapter

AIA CHARLOTTE

109 Wappoo Creek Drive, Suite 4B
Charleston, SC 29412
Tel: 843-795-9965 Fax: 843-795-9757
http://www.carolinaheatpipe.com

Commodity Market Energy Credit

Carolina Heat Pipe Solutions for Energy Recovery and reducing reheat KW hours used to control humidity levels may be applied to the emerging energy efficiency commode market. This new market will allow trading of energy efficiency certificates or “white Tags”, as they have been dubbed by Georgia-based energy efficiency marketer Sterling Planet. Several other states and member of Congress are contemplating the concept.

A certificate represents one megawatt-hour (MWh) of electricity saved-perhaps through a Carolina Heat Pipe Solution or the installation of efficient lighting in an office building, advanced motors at a factory or fuel-saving cogeneration units attached to a university. Utilities and other retail electricity sellers buy the certificates to comply with a state-mandated energy efficiency portfolio standard (EEPS), an enforceable energy savings requirement.

Improved EER due to TRAHP™

PROJECT: **Govenors Mansion Energy Benefit Summary**
HVAC Renovation
CHP 04-0604

CONTRACTOR:
PURCHASE ORDER:

EQUIPMENT SUPPLIER: **CAROLINA HEAT PIPE, INC.**

PERFORMANCE: **See enclosed psychometric chart**

CAROLINA HEAP PIPE MODIFICATION INCLUDED:

TRAHP capacity:	31,510 BTUH
Reheat load avoided:	36,485 BTUH
Increased Total Output:	67,995 BTUH

EER= output/input without modification- 104,000/10.097 KW = 10.3
New EER with added output BTUH = 171,995/10.097 KW = 17.03

Heat Recovery Sample Energy Savings Benefit

Unit	CFM supply	ENT coil temperature	Temp LVG 6 row		BTUH Transfer At Design Conditions	
HRC3 -0A	9700	92	81.4			
HRC3 -EA	10700	74	84.6			
		Summer Delta T			116,990	Summer
Average	10200	10.6				
HRC3 -0A	9700	0	41.3			
HRC3 -EA	10700	70	28.7			
		Winter Delta T			454,961	Winter
		41.3				
HRC4 -OA	12800	92	81.7			
HRC4 -EA	11800	74	84.3			
		Summer Delta T			136,294	Summer
Average	12300	10.3				
HRC4 -OA	8500	0	43.4			
HRC4 -EA	11800	70	70.0			
		Winter Delta T			398,412	Winter
		43.4				
					for 6 row TRAHP	
Maximum Summer BTUH heat transfer rate between both TRAHP sections					253,284	
Maximum Winter BTUH heat transfer rate between both TRAHP sections					853,373	
Please note						
The Carolina Heat Pipe Split System Thermosyphon Heat Pipe (TRAHP) is reversible without the use of a refrigerant pump when at the sections are at the same elevation						
Also it can be regulated by a logic sensor or DDC						

VII. Reference Articles

ASHRAE Handbook Articles

2008 HVAC Systems and Equipment: Wraparound Heat Exchangers

2008 HVAC Systems and Equipment: Thermosyphon Heat Exchangers

2007 HVAC Applications: Humidity Control for Preschool Classrooms

2005 Fundamentals: Wall Construction Examples

ASHRAE Standard 62

Standard 62-2001, paragraph 5.10, 5.11

Improvements to 62.1 (Summer 2008)

62.1 First Cost and Energy Impacts (Fall 2007)

ASHRAE Indoor Air Quality (IAQ) Applications

IAQ After a Disaster (Winter 2008)

No Quick Fixes for Preventing Mold (2003)

"Fan On" Can Cause Problems (2002)

Humidity Problem? Trade In Your Thermostat (2001)

Other Technical Articles

LEED Certification Information

The Power of Savings

A Thermosyphon Run Around Heat Pipe Can Solve Mold Causing Problems, by Richard W. Trent

Curing Sick Buildings, by Louis Drake, P.E.

Indirect Health Effects of Relative Humidity in Indoor Environments

Mold in Schools: a health alert

Doing Business- Mold: a fungus among us

Is Your Office Killing You? - BusinessWeek

M-O-L-D - Another BAD Four Letter Word

2008 HVAC Systems and Equipment:

Wraparound Heat Exchangers

CHAPTER 22

AIR-COOLING AND DEHUMIDIFYING COILS

Uses for Coils 22.1
Coil Construction and Arrangement 22.1
Coil Selection 22.5
Airflow Resistance 22.6
Heat Transfer 22.6
Performance of Sensible Cooling Coils 22.7
Performance of Dehumidifying Coils 22.9
Determining Refrigeration Load 22.14
Maintenance 22.15
Symbols 22.16

MOST equipment used today for cooling and dehumidifying an airstream under forced convection incorporates a coil section that contains one or more cooling coils assembled in a coil bank arrangement. Such coil sections are used extensively as components in room terminal units; larger factory-assembled, self-contained air conditioners; central station air handlers; and field built-up systems. Applications of each coil type are limited to the field within which the coil is rated. Other limitations are imposed by code requirements, proper choice of materials for the fluids used, the configuration of the air handler, and economic analysis of the possible alternatives for each installation.

USES FOR COILS

Coils are used for air cooling with or without accompanying dehumidification. Examples of cooling applications without dehumidification are (1) precooling coils that use well water or other relatively high-temperature water to reduce load on the refrigerating equipment and (2) chilled-water coils that remove sensible heat from chemical moisture-absorption apparatus. The heat pipe coil is also used as a supplementary heat exchanger for preconditioning in air-side sensible cooling (see Chapter 25). Most coil sections provide air sensible cooling and dehumidification simultaneously.

The assembly usually includes a means of cleaning air to protect the coil from dirt accumulation and to keep dust and foreign matter out of the conditioned space. Although cooling and dehumidification are their principal functions, cooling coils can also be wetted with water or a hygroscopic liquid to aid in air cleaning, odor absorption, or frost prevention. Coils are also evaporatively cooled with a water spray to improve efficiency or capacity. Chapter 40 has more information on indirect evaporative cooling. For general comfort conditioning, cooling, and dehumidifying, the **extended-surface (finned) cooling coil** design is the most popular and practical.

COIL CONSTRUCTION AND ARRANGEMENT

In finned coils, the external surface of the tubes is primary, and the fin surface is secondary. The primary surface generally consists of rows of round tubes or pipes that may be staggered or placed in line with respect to the airflow. Flattened tubes or tubes with other nonround internal passageways are sometimes used. The inside surface of the tubes is usually smooth and plain, but some coil designs have various forms of internal fins or turbulence promoters (either fabricated or extruded) to enhance performance. The individual tube passes in a coil are usually interconnected by return bends (or hairpin bend tubes) to form the serpentine arrangement of multipass tube circuits. Coils are usually available with different circuit arrangements and combinations offering varying numbers of parallel water flow passes within the tube core (Figure 1).

Cooling coils for water, aqueous glycol, brine, or halocarbon refrigerants usually have aluminum fins on copper tubes, although copper fins on copper tubes and aluminum fins on aluminum tubes (excluding water) are also used. Adhesives are sometimes used to bond header connections, return bends, and fin-tube joints, particularly for aluminum-to-aluminum joints. Certain special-application coils feature an all-aluminum extruded tube-and-fin surface.

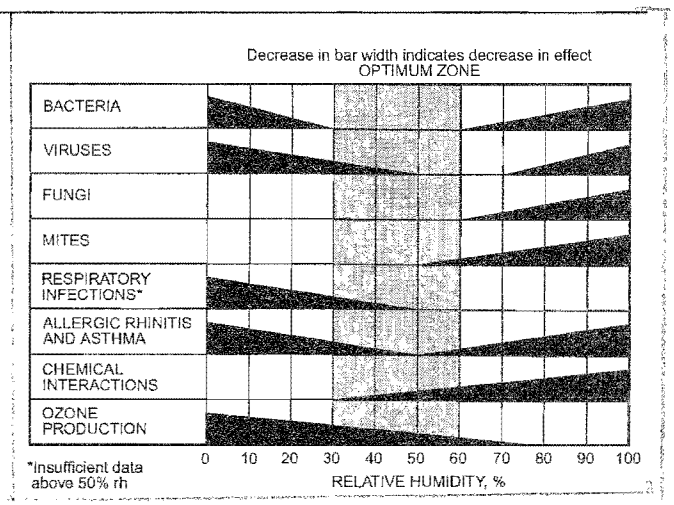

Fig. 1 Typical Water Circuit Arrangements

Common core tube outside diameters are 5/16, 3/8, 1/2, 5/8, 3/4, and 1 in., with fins spaced 4 to 18 per inch. Tube spacing ranges from 0.6 to 3.0 in. on equilateral (staggered) or rectangular (in-line) centers, depending on the width of individual fins and on other performance considerations. Fins should be spaced according to the job to be performed, with special attention given to air friction; possibility of lint accumulation; and frost accumulation, especially at lower temperatures.

Tube wall thickness and the required use of alloys other than copper are determined mainly by the coil's working pressure and safety factor for hydrostatic burst (pressure). Maximum allowable working pressure (MAWP) for a coil is derived according to ASME's *Boiler and Pressure Vessel Code*, Section VIII, Division 1 and Section II (ASTM material properties and stress tables). Pressure vessel safety standards compliance and certifications of coil construction may be required by regional and local codes before field installation. Fin type and header construction also play a large part in determining wall thickness and material. Local job site codes and applicable nationally recognized safety standards should be consulted in coil design and application.

This type of air-cooling coil normally has a shiny aluminum air-side surface. For special applications, the fin surface may be copper or have a brown or blue-green dip-process coating. These coatings protect the fin from oxidation that occurs when common airborne corrosive contaminants are diluted on a wet (dehumidifying) surface. Corrosion protection is increasingly important as indoor air quality (IAQ) guidelines call for higher percentages of outside air. Baked-on or anodized coating improves the expected service life

The preparation of this chapter is assigned to TC 8.4, Air-to-Refrigerant Heat Transfer Equipment.

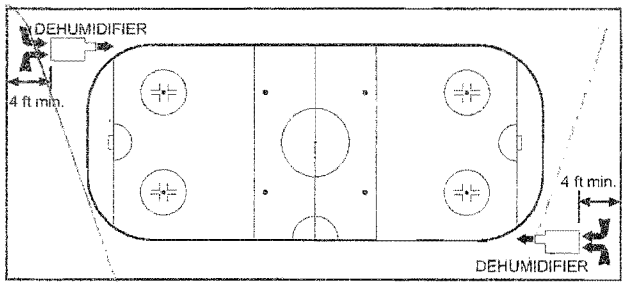

Fig. 11 Typical Installation of Ice Rink Dehumidifiers

INSTALLATION AND SERVICE CONSIDERATIONS

Equipment must be installed properly so that it functions in accordance with the manufacturer's specifications. Interconnecting diagrams for the low-voltage control system should be documented for proper future servicing. Planning is important for installing large, roof-mounted equipment because special rigging is frequently required.

The refrigerant circuit must be clean, dry, and leak-free. An advantage of packaged equipment is that proper installation minimizes the risk of field contamination of the circuit. Take care to properly install split-system interconnecting tubing (e.g., proper cleanliness, brazing, evacuation to remove moisture). Split systems should be charged according to the manufacturer's instructions.

Equipment must be located to avoid noise and vibration problems. Single-package equipment of over 20 tons in capacity should be mounted on concrete pads if vibration control is a concern. Large-capacity equipment should be roof-mounted only after the roof's structural adequacy has been evaluated. Additional installation guidelines include the following:

- In general, install products containing compressors on solid, level surfaces.
- Avoid mounting products containing compressors (e.g., remote units) on or touching the foundation of a building. A separate pad that does not touch the foundation is recommended to reduce noise and vibration transmission through the slab.
- Do not box in outdoor air-cooled units with fences, walls, overhangs, or bushes. Doing so reduces the unit's air-moving ability, reducing efficiency.
- For a split-system remote unit, choose an installation site that is close to the indoor part of the system to minimize refrigerant charge and pressure drop in the connecting refrigerant tubing.
- Contact the equipment manufacturer or consult the installation instructions for further information on installation procedures.

Equipment should be listed or certified by nationally recognized testing laboratories to ensure safe operation and compliance with government and utility regulations. Equipment should also be installed to comply with agency standards' rating and application requirements to ensure that it performs according to industry criteria. Larger and more specialized equipment often does not carry agency labeling. However, power and control wiring practices should comply with the *National Electrical Code®* (NFPA *Standard* 70). Consult local codes before design, and consult local inspectors before installation.

A clear, accurate wiring diagram and well-written service manual are essential to the installer and service personnel. Easy, safe service access must be provided for cleaning, lubrication, and periodic maintenance of filters and belts. In addition, access for replacement of major components must be provided and preserved.

Service personnel must be qualified to repair or replace mechanical and electrical components and to recover and properly recycle or dispose of any refrigerant removed from a system. They must also understand the importance of controlling moisture and other contaminants in the refrigerant circuit; they should know how to clean a hermetic system if it has been opened for service (see Chapter 6 of the 2006 *ASHRAE Handbook—Refrigeration*). Proper service procedures help ensure that the equipment continues operating efficiently for its expected life.

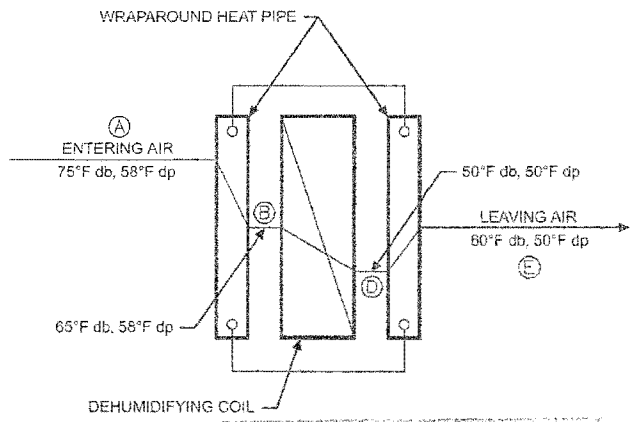

Fig. 12 Dehumidification Enhancement with Wraparound Heat Pipe

WRAPAROUND HEAT EXCHANGERS

An air-to-air heat exchanger (heat pipe, coil runaround loop, fixed-plate heat exchanger, or rotary heat exchanger) in a series (or wraparound) configuration can be used to enhance moisture removal by a mechanical dehumidifier, improving efficiency, and possibly allowing reduced refrigeration capacity in new systems. Other uses of air-to-air heat exchangers are covered in Chapter 25.

Air-to-air heat exchangers are used with a mechanical dehumidification system to passively move heat from one place to another. The most common configuration used for dehumidification is the **runaround** (or **wraparound**) configuration (Figure 12), which removes sensible heat from the entering airstream and transfers it to the leaving airstream. (Points A to E correspond to points labeled in Figure 13.) This improves the cooling coil's latent dehumidification capacity. This method can be applied if design calculations have taken into account the condition of air entering the evaporator coil.

In the runaround or wraparound configuration (Figure 12), one section of the air-to-air heat exchanger is placed upstream of the cooling coil and the other section is placed downstream of the cooling coil. The air is precooled before entering the cooling coil. Heat absorbed by the upstream section of the air-to-air heat exchanger is then transferred to air leaving the cooling coil (or supply airstream) by the downstream section.

Sensible precooling by the air-to-air heat exchanger reduces the sensible load on the cooling coil, allowing an increase in its latent capacity (Figure 13). The combination of these two effects lowers the system SHR, much like the process described in the Mechanical Dehumidifiers section. The addition of the air-to-air heat exchanger brings the condition of air entering the evaporator coil closer to the saturation line on the psychrometric chart (A to B). In new installations, this requires careful evaporator coil design that accounts for the actual range of air conditions after the air-to-air heat exchanger, which may differ significantly from the return air conditions.

In retrofits, the **duct-to-duct** (or **slide-in**) configuration (Figure 14) is sometimes used. One section of the air-to-air heat exchanger is placed in the return airstream, and the other section is placed in the supply airstream. This configuration, however, does not provide

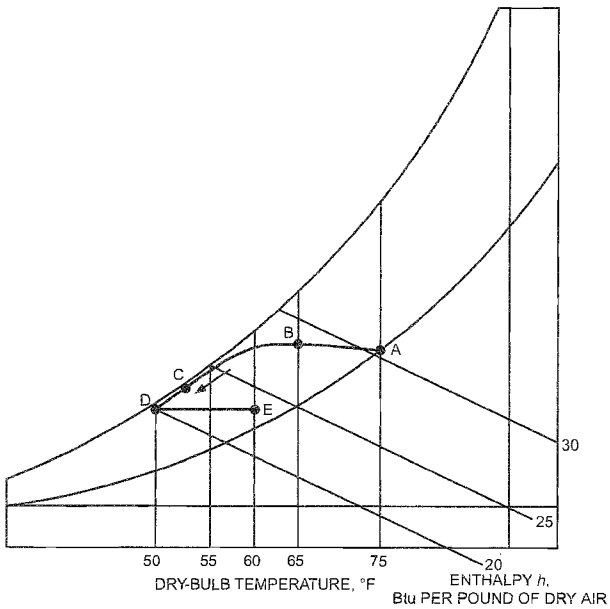

Fig. 13 Enhanced Dehumidification with a Wraparound Heat Pipe

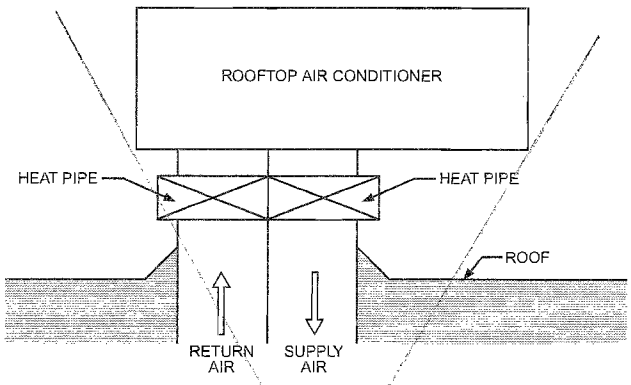

Fig. 14 Slide-in Heat Pipe for Rooftop Air Conditioner Refit (Kittler 1996)

as much benefit as the wraparound configuration because (1) the upstream side of the heat exchanger is located upstream of where outdoor air enters the system, (2) the higher velocity reduces the effectiveness and increases the air-side pressure drop of the heat exchanger, and (3) it requires an additional filter upstream of the air-to-air heat exchanger.

In retrofits, the lower entering-air temperature at the evaporator coil lowers the temperature of the air leaving the evaporator coil. Evaporator coil capacity is reduced because of the lower entering wet-bulb temperature, changing the operating point of the system. This must be analyzed to ensure that the mechanical refrigeration system still operates correctly. If evaporator coil freeze-up is possible, the system must include some means of deactivating the air-to-air heat exchanger or increasing airflow to prevent evaporator freezing. Some way to modulate the air-to-air heat exchanger's capacity may be incorporated to better meet the load requirement of the mechanical dehumidifier.

Adding an air-to-air heat exchanger typically improves the moisture removal capacity of an existing mechanical dehumidification system by allowing a lower supply air dew point, while providing some reheat without additional energy use. Proper design practices must be followed to ensure that the unit's mechanical refrigeration system will still operate efficiently with the new entering air conditions and additional air-side pressure drop. Also, the added pressure drop of the air-to-air heat exchanger is likely to reduce the airflow delivered, unless fan speed in increased. If increasing fan speed is necessary, verify that the fan motor can handle the added load.

Figure 13 shows the dehumidification process when an air-to-air heat exchanger is added to an existing evaporator coil. Point A to C shows the cooling and dehumidification process of an existing direct-expansion (DX) evaporator coil, without the air-to-air heat exchanger. Point A to B shows precooling by the upstream section of heat exchanger. The process line from B to D (versus B to C, without the heat exchanger) shows how the evaporator coil's dehumidification performance improves (lowering leaving air dew point, from C to D) if an air-to-air heat exchanger is added to the existing system, because the enthalpy of the air entering the evaporator is lowered. Point D to E illustrates that the heat removed from air upstream of the evaporator (A to B) is added back into air leaving the evaporator. The total amount of heat energy (enthalpy) removed in section A-B is equal to the amount of heat added in section D-E.

REFERENCES

AHAM. 2003. Dehumidifiers. *Standard* DH-1-2003. Association of Home Appliance Manufacturers, Chicago, IL.

ARI. 1999. Indoor pool dehumidifiers. *Standard* 910. Air Conditioning and Refrigeration Institute, Arlington, VA.

ASHRAE. 2004. Energy standard for buildings except low-rise residential buildings. ANSI/ASHRAE *Standard* 90.1.

EPA. 2008. *ENERGY STAR®*. http://www.energystar.gov.

Kittler, R. 1996. Mechanical dehumidification control strategies and psychrometrics. *ASHRAE Transactions* 102(2):613-617.

Morris, W. 2003. The ABCs of DOAS. *ASHRAE Journal* (May).

Murphy, J. 2006. Smart dedicated outdoor-air systems. *ASHRAE Journal* (July).

Nevins, R., R.R. Gonzalez, Y. Nishi, and A.P. Gagge. 1975. Effect of changes in ambient temperature and level of humidity on comfort and thermal sensations. *ASHRAE Transactions* 81(2).

BIBLIOGRAPHY

AHAM. Semiannually. *Directory of certified dehumidifiers*. Association of Home Appliance Manufacturers, Chicago, IL.

ASHRAE. 2004. Safety standard for refrigeration systems. ANSI/ASHRAE *Standard* 15-2004.

CSA. 2002. Canadian electrical code. CSA *Standard* C22.1-02. Canadian Standards Association, Toronto.

Harriman, L., G. Brundrett, and R. Kittler. 2001. *Humidity control design guide for commercial and institutional buildings*. ASHRAE.

IEC. 2002. Household and similar electric appliances—Safety—Part 2: Particular requirements for electrical heat pumps, air-conditioners and dehumidifiers. IEC *Standard* 60335-2-40 (2002-12). International Electrotechnical Commission.

Kittler, R. 1983. Indoor natatoriums design and energy recycling. *ASHRAE Transactions* 95(1):521-526.

Kittler, R. 1994. Separate makeup air makes IAQ affordable. *Mechanical Buyer & Specifier* (June).

NFPA. 2008. *National electrical code®*, 2008 edition. NFPA *Standard* 70-2008. National Fire Protection Association, Quincy, MA.

UL. 2002. Leakage current for appliances. *Standard* C 101-02. Underwriters Laboratories, Northbrook, IL.

UL. 2004. Dehumidifiers. *Standard* 474-04. Underwriters Laboratories, Northbrook, IL.

UL. 2007. *Electrical appliances and utilization equipment directory*. Underwriters Laboratories, Northbrook, IL.

Wilson, G., R. Kittler, J. Teskoski, P. Reynolds, and K. Coursin. 1991. Controlling indoor environments for comfort, structure protection. *Aquatics International* (November/December).

2008 HVAC Systems and Equipment:

Thermosyphon Heat Exchangers

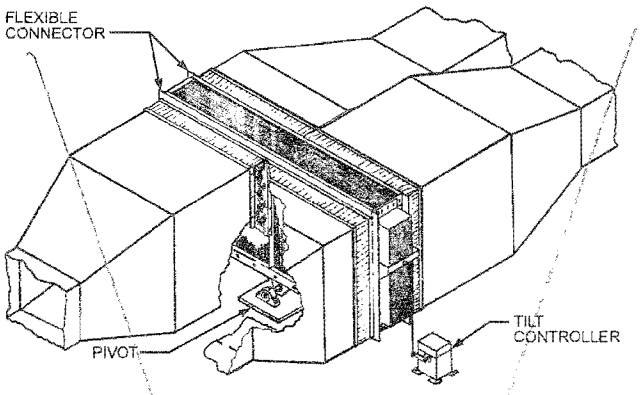

Fig. 13 Heat Pipe Heat Exchanger with Tilt Control

Tilt control may be desired

- To change from supply air heating to supply air cooling (i.e., to reverse the direction of heat flow) during seasonal changeover
- To modulate effectiveness to maintain desired supply air temperature (often required for large buildings to avoid overheating air supplied to the interior zone)
- To decrease effectiveness to prevent frost formation at low outside air temperatures (with reduced effectiveness, exhaust air leaves the unit at a warmer temperature and stays above frost-forming conditions)

Other devices, such as face-and-bypass dampers and preheaters, can also be used to control the rate of heat exchange.

Bidirectional heat transfer in heat pipes is achieved through recent design improvements. Some heat pipe manufacturers have eliminated the need for tilting for capacity control or seasonal changeover. Once installed, the unit is removed only for routine maintenance. Capacity and frost control can also be achieved through bypassing airflow over the heat pipes, as for air coils.

Example 3. Sensible Heat Energy Recovery in a Heat Pipe

Outside air at 50°F enters a six-row heat pipe with a flow rate of 660 lb/min and a face velocity of 500 fpm. Exhaust air enters the heat pipe with the same velocity and flow rate but at 75°F. The pressure drop across the heat pipe is 0.6 in. of water. The supply air density is 0.08 lb/ft^3. The efficiency of the electric motor and the connected fan are 90 and 75%, respectively. Assuming the performance characteristics of the heat pipe are as shown in Figure 12, determine the sensible effectiveness, exit temperature of supply air to the space, energy recovered, and power supplied to the fan motor.

Solution:

From Figure 12, at face velocity of 500 fpm and with six rows, the effectiveness is about 58%. Because the mass flow rate of the airstreams is the same and assuming their specific heat of 0.24 Btu/lb·°F is the same, then the exit temperature of the supply air to the space can be obtained from Equation (3a):

$$t_2 = 50 - 0.58\frac{(660\text{ lb/min})(0.24\text{ Btu/lb}\cdot°\text{F})}{(660\text{ lb/min})(0.24\text{ Btu/lb}\cdot°\text{F})}(50-75) = 64.5°\text{F}$$

The sensible energy recovered can be obtained from Equation (3c) as

$$q_s = (60)(660\text{ lb/min})(0.24\text{ Btu/lb}\cdot°\text{F})(64.5-50) = 139{,}200\text{ Btu/h}$$

The supply air fan power can be obtained from Equation (11) as

$$Q_s = \frac{660\text{ lb/min}}{0.08\text{ lb/ft}^3} = 8250\text{ ft}^3/\text{min}$$

$$P_s = [(8250\text{ ft}^3/\text{min})(0.6)]/[(6356)(0.9)(0.75)] = 1.15\text{ hp}$$

Because there are two airstreams, neglecting the difference in the air densities of the airstreams, the total pumping power of the heat pipe is twice the above value (i.e., 2.3 hp).

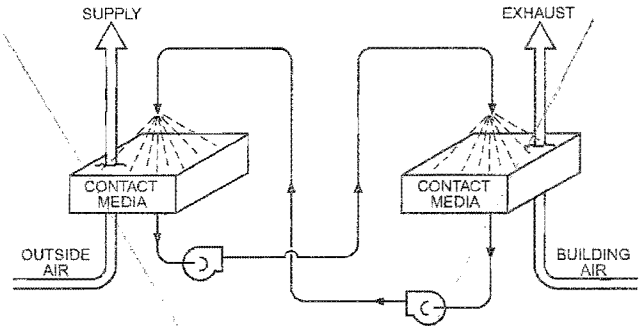

Fig. 14 Twin-Tower Enthalpy Recovery Loop

Twin-Tower Enthalpy Recovery Loops

In this air-to-liquid, liquid-to-air enthalpy recovery system, a sorbent liquid circulated between supply and exhaust contactor towers directly contacts both airstreams, transporting water vapor and energy between the airstreams (Figure 14). Supply air temperatures can be as high as 115°F or as low as –40°F. Any number of vertical and horizontal airflow contactor towers can be combined into a common system of any airflow capacity.

Leaving air passes through demister pads to remove entrained sorbent solution. Airstreams containing lint, animal hair, or other solids should be filtered upstream of the contactor towers. Wetted particles should be filtered from the sorbent solution, which minimizes particulate cross-contamination. Sorbent solutions (typically a halogen salt solution such as lithium chloride and water) usually contain bactericidal and viricidal additives. Testing has shown that contactor towers can effectively remove up to 94% of atmospheric bacteria, a desirable feature in health care applications. Limited gaseous cross-contamination may occur. If either airstream contains gaseous contaminants, their effects on the sorbent solution should be investigated.

In colder climates, moisture losses from the exhaust airstream may overdilute the sorbent solution. Heating the sorbent liquid entering the supply air contactor tower raises the discharge temperature and humidity of the leaving supply air, preventing overdilution. This, coupled with automatic makeup water addition, can maintain sorbent solution concentrations during cold weather, enabling the system to deliver air at a fixed humidity and temperature.

THERMOSIPHON HEAT EXCHANGERS

Two-phase thermosiphon heat exchangers are sealed systems that consist of an evaporator, a condenser, interconnecting piping, and an intermediate working fluid in both liquid and vapor phases. Two types of thermosiphon are used: a sealed tube (Figure 15) and a coil type (Figure 16). In the **sealed-tube thermosiphon**, the evaporator and the condenser are usually at opposite ends of a bundle of straight, individual thermosiphon tubes, and the exhaust and supply ducts are adjacent to each other (this arrangement is similar to that in a heat pipe system). In **coil-type thermosiphons**, evaporator and condenser coils are installed independently in the ducts and are interconnected by the working fluid piping (this configuration is similar to that of a coil energy recovery loop).

A thermosiphon is a sealed system containing a two-phase working fluid. Because part of the system contains vapor and part contains liquid, the pressure in a thermosiphon is governed by the liquid temperature at the liquid/vapor interface. If the surroundings cause a temperature difference between the regions where liquid and vapor interfaces are present, the resulting vapor pressure difference causes vapor to flow from the warmer to the colder region. The flow is sustained by condensation in the cooler region and by evaporation in the warmer region. The condenser and evaporator must be oriented so

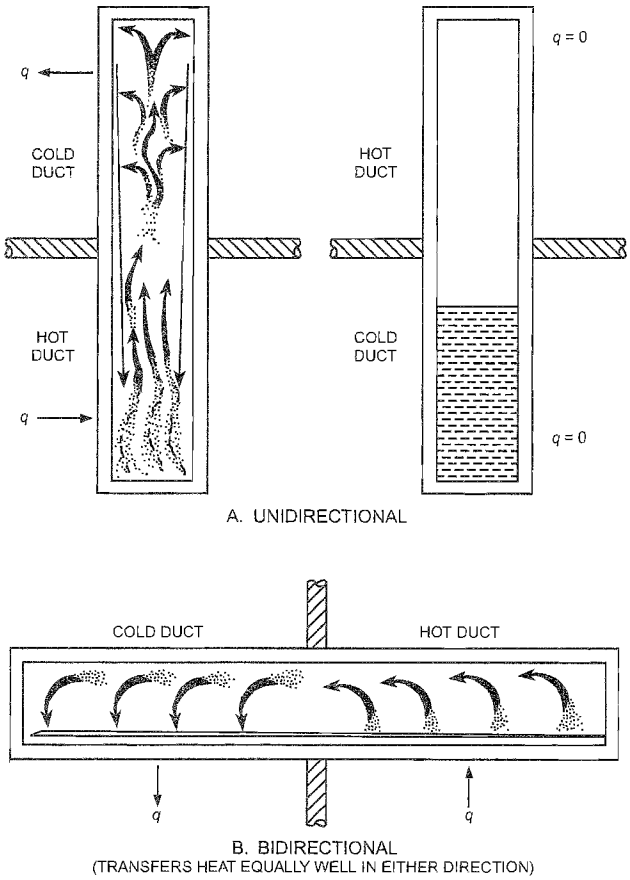

Fig. 15 Sealed-Tube Thermosiphons

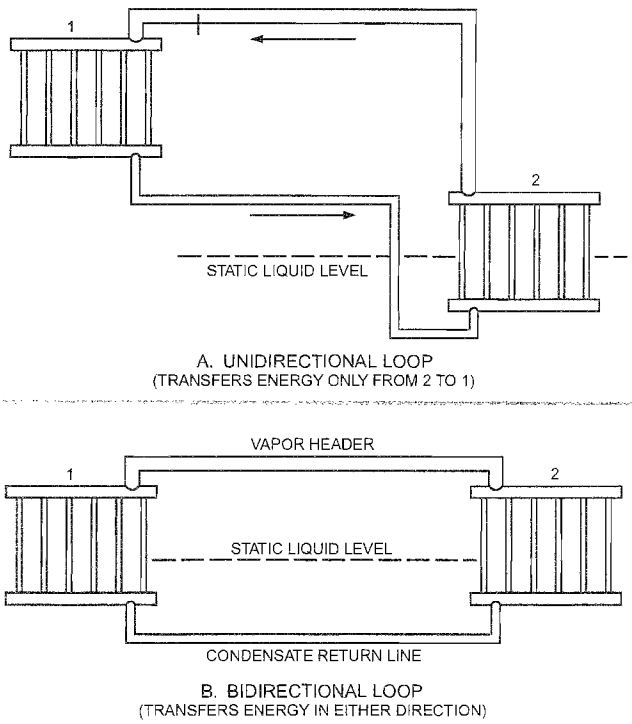

Fig. 16 Coil-Type Thermosiphon Loops

that the condensate can return to the evaporator by gravity (Figures 15 and 16).

In thermosiphon systems, a temperature difference and gravity force are required for the working fluid to circulate between the evaporator and condenser. As a result, thermosiphons may be designed to transfer heat equally in either direction (bidirectional), in one direction only (unidirectional), or in both directions unequally.

Although similar in form and operation to heat pipes, thermosiphon tubes are different in two ways: (1) they have no wicks and hence rely only on gravity to return condensate to the evaporator, whereas heat pipes use capillary forces; and (2) they depend, at least initially, on nucleate boiling, whereas heat pipes vaporize the fluid from a large, ever-present liquid/vapor interface. Thus, thermosiphon heat exchangers may require a significant temperature difference to initiate boiling (Mathur and McDonald, 1987; McDonald and Shivprasad 1989). Thermosiphon tubes require no pump to circulate the working fluid. However, the geometric configuration must be such that liquid working fluid is always present in the evaporator section of the heat exchanger.

Thermosiphon loops differ from other coil energy recovery loop systems in that they require no pumps and hence no external power supply, and the coils must be appropriate for evaporation and condensation. Two-phase thermosiphon loops are used for solar water heating (Mathur 1990a) and for performance enhancement of existing (i.e., retrofit applications) air-conditioning systems (Mathur 1997). Two-phase thermosiphon loops can be used to downsize new air-conditioning systems and thus reduce the overall project costs. Figure 17 shows thermosiphon loop performance (Mathur and McDonald 1986).

COMPARISON OF AIR-TO-AIR ENERGY RECOVERY SYSTEMS

It is difficult to compare different types of air-to-air energy recovery systems based on overall performance. They can be compared based on certified ratings such as sensible, latent, and total effectiveness or on air leakage parameters. To compare them on payback period or maximum energy cost savings, accurate values of their capital cost, life, and maintenance cost, which vary from product to product for the same type of recovery system, must be known. Without such data, and considering the data available in the open literature such as that presented by Besant and Simonson (2003), use Table 2's comparative data for common types of air-to-air energy recovery devices.

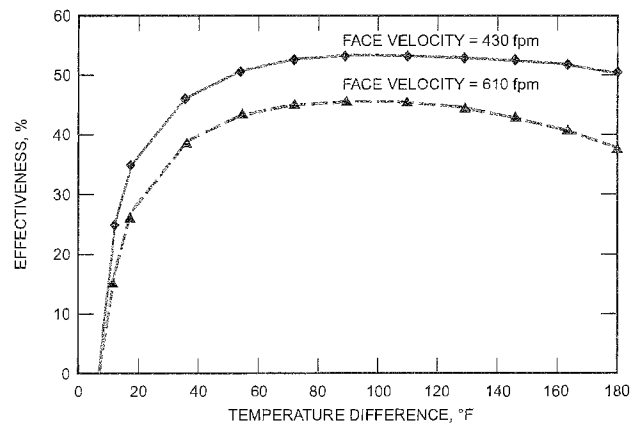

Fig. 17 Typical Performance of Two-Phase Thermosiphon Loop
(Mathur and McDonald 1986)

2007 HVAC Applications:

Humidity Control for Preschool Classrooms

Table 3 Typical Recommended Design Guidelines for HVAC: Related Background Sound for Preschool Facilities

Category	Sound Criteria[a, b] RC (N); QAI < 5 dB	Comments
Infant, Toddler, and Preschooler Classrooms	25 to 30	
Administrative/Office Areas	30 to 40	For open-plan office
Service/Support Areas	35 to 45	

Notes:
[a]Based on Chapter 47.
[b]RC (Room Criterion), QAI (Quality Assessment Index) from Chapter 7 of 2005 *ASHRAE Handbook—Fundamentals*.

strongly recommended for additional information on applying this standard. Table 3 lists design criteria for acceptable noise in preschool facilities.

Load Characteristics

Preschool cooling and heating loads depend heavily on ambient conditions, because the rooms typically have exterior exposures (walls, windows, and roofs) and also relatively higher needs for ventilation. Although preschool facilities are relatively small, the design engineer must pay special attention to properly calculate the cooling, heating, dehumidification, and humidification loads. Sizing and applying the HVAC equipment is critical for handling the loads and the large amounts of outdoor air from a capacity and occurrence standpoint (peak sensible and latent loads do not always coincide).

Humidity Control

Preschool classrooms require humidity control to provide human comfort and prevent health problems. Maintaining humidity levels between 30 and 60°F dew point satisfies nearly all people nearly all the time. However, the designer should discuss comfort expectations with the owner, to avoid misunderstandings.

In hot and humid climates, it is recommended that air conditioning and/or dehumidification be operated year-round to prevent growth of mold and mildew. Dehumidification can be improved by adding optional condenser heat/reheat coils, heat pipes, or air-to-air heat exchangers in conjunction with humidity sensors in the conditioned space or return air. Additional information on humidity control is in the section on K-12 Schools.

Systems and Equipment Selection

HVAC systems for preschools are typically decentralized, using either self-contained or split air-conditioners or heat pumps (typically air- or water-source). When the preschool is part of a larger facility, utilities such as chilled water, hot water, or steam from a central plant can be used. When natural gas is available, the heating system can be a gas-fired furnace, or, when economically justifiable, electric heat can be used.

The type of HVAC equipment selected also depends on the climate and the months of operation. In hot and dry climates, for instance, evaporative cooling may be the primary type of cooling. In colder climates, heating can also be provided by a hot-water hydronic system originating from a boiler plant in conjunction with radiant floor or hot-water coils.

Decentralized systems are dedicated systems serving a single zone, and typically include the following:

- Direct-expansion (DX) split systems
- Rooftop packaged air conditioners or heat pumps with or without optional enhanced dehumidification (condenser reheat coil)
- Rooftop packaged air conditioners or heat pumps integrated with an energy recovery module, with optional enhanced dehumidification (condenser reheat coil; see Figure 1)
- Water-source heat pumps (with cooling tower and supplementary boiler)

Table 4 Applicability of Systems to Typical Areas[d]

Typical Area	Decentralized Cooling/Heating Systems[c]: PSZ/SZ Split	PSZ with Energy Recovery and Dehumidification	WSHP	Geothermal Heat Pump	Heating Only: Radiant Floor[b]
Classrooms	X[a]	X[a]	X	X	X
Administrative Areas, Lobby	X		X	X	
Kitchen	X		X	X	
Ventilation (Outdoor Air)	DOAS		DOAS	DOAS	DOAS

SZ = single zone
PSZ = packaged single zone
WSHP = water-source heat pump
DOAS = dedicated outdoor air system

Notes:
[a]PSZ for classrooms requires individual thermostatic control.
[b]Typically with cooling system such as PSZ/SZ split.
[c]Heating system for PSZ/SZ split can be gas furnace, hot-water coil, or electric.
[d]See Table 11 for additional systems if preschool is not a stand-alone facility.

- Geothermal heat pumps (ground-coupled, ground-water-source, surface-water-source)
- Packaged dedicated outdoor air systems (DOAS) with DX system for cooling and gas-fired furnace, electric heating, or part of water-source and geothermal heat pump system

Information about decentralized systems can be found in Chapters 5 and 45 of the 2004 *ASHRAE Handbook—HVAC Systems and Equipment*. Additional information on geothermal heat pumps can be found in Kavanaugh and Rafferty (1997) and Chapter 32 of this volume. Chapter 6 of the 2004 *ASHRAE Handbook—HVAC Systems and Equipment* provides information on radiant heating.

Note that some decentralized systems may need additional acoustical modifications to meet the design criteria in Table 3. Therefore, it is strongly recommended to carefully check the acoustical implications of applying these systems.

Dedicated Outdoor Air Systems (DOAS). Specialized dedicated outdoor air systems (DOAS) should be used to treat outdoor air before it is introduced into classrooms or other areas. DOAS units can bring 100% outdoor air to at least space conditions, which allows the individual space units to handle only the space cooling and heating loads. A detailed description of DOAS is shown in the K-12 Schools section of this chapter. Additional information can be found in Chapter 47 of the 2004 *ASHRAE Handbook—HVAC Systems and Equipment*.

Systems Selection by Application. Table 4 shows the applicability of systems to areas in preschool facilities.

Energy Considerations

Energy standards such as ANSI/ASHRAE/IESNA *Standard* 90.1-2004 and local energy codes should be followed for minimum energy conservation criteria. Additional energy conservation measures include the following:

- **Energy management systems (EMS)** and **direct digital control (DDC)** for easier maintainability of comfort conditions, optimized operation, troubleshooting, and monitoring
- **Temperature night/weekends setback** (winter) or **setup** (summer) by central EMS or stand-alone programmable thermostats
- **Morning warm-up** (winter) or **cooldown** (summer), typically by the central EMS
- **Ventilation control**, by throttling the space outdoor air damper to minimum position or close during unoccupied hours
- **Air-to-air energy recovery** for ventilation or in conjunction with the HVAC unit
- **Enhanced summer humidity control** by switching DOAS from 100% outdoor air to 100% recirculation and maintaining required summer humidity dew-point temperature

2005 Fundamentals:

Wall Construction Examples

studies (Rose 1992) concluded that support for attic ventilation was at times contradictory and the specific requirement for 1 ft^2 of vent area for 300 ft^2 of floor space not confirmed by the findings.

Four commonly cited reasons for attic ventilation are (1) preventing moisture damage, (2) enhancing the service life of temperature-sensitive roofing materials, (3) preventing ice dams, and (4) reducing the cooling load (TenWolde and Rose 1999). In some cases, venting may be inconsistent with the moisture control design approach. If the attic is vented, take care to prevent entry of snow and to prevent airflow that might degrade thermal performance of insulating materials (Hens and Janssens 1999).

Moisture. Vents have been shown to effectively lower moisture levels in roof sheathing for attics constructed with a single unconditioned space, sloped roof, and tight ceiling plane (Jordan et al. 1948). It is relatively easy and inexpensive to install vents in such an attic without compromising ceiling insulation effectiveness. In heating climates, attic ventilation usually provides some protection from excessive moisture accumulation in the roof sheathing. If indoor humidity is high and humid indoor air leaks into the attic, attic vents by themselves may not prevent moisture accumulation.

Moisture control in attics in heating climates depends primarily on (1) maintaining lower indoor humidity levels during cold weather, (2) ensuring maintainable airtightness and vapor resistance in the ceiling, and (3) attic ventilation (NRC 1963).

Temperature. A ventilated attic is cooler in the summer than an unventilated attic, and ventilation can reduce the temperature of shingles during daylight hours. Asphalt shingle manufacturers encourage ventilation as a prescriptive practice (ARMA 1997). In one study, the temperature difference from power or turbine ventilation over soffit ventilation led to significant differences in maximum attic air temperatures, but was not shown effective at energy conservation in moderately or heavily insulated ceilings (Burch and Treado 1978). It is not clear whether attic air temperature reduction is a significant factor in extending the service life of shingles (TenWolde and Rose 1999), because long-term studies on the temperature effects on shingle service life are incomplete.

Ice Dams. Ventilation of roofs, coupled with additional insulation and reductions in air exfiltration, reduces ice dam damage during winter in cold regions (Buska et al. 1998). Where heat sources are located in the unconditioned attic space, large amounts of ventilation may be needed to prevent ice dams, necessitating mechanical attic ventilation (Tobiasson et al. 1994). Heat sources include furnaces, air handlers, or ductwork with conductive or convective heat losses.

Reducing heat loss into the attic by effective insulation, air leakage control, and avoiding heat sources such as uninsulated or leaky heating ducts in the attic, possibly coupled with ventilation, is a positive way of reducing ice dams and moisture damage (Fugler 1999). Damage from ice damming in roof valleys and eaves can also be prevented by installing a waterproof underlayment of sufficient width beneath the shingles.

Other Considerations. Roofs with absorbent claddings, such as wood shingles or cement or clay tiles are subject to solar-driven moisture penetration (Cunningham et al. 1990). Moisture is driven into the roof when it is wetted by rain or dew and subsequently exposed to sunshine. When the moisture source is from the exterior, an impermeable membrane under the shingles or tiles can greatly reduce moisture transfer into the roof, but water accumulation on the underside of this membrane should be prevented.

Leaks cause another moisture load on roofs. Roof leaks are properly addressed by repair rather than by ventilation.

Cathedral Ceilings. Cathedral ceilings have isolated air cavities in each rafter bay and thus are prone to a wider range of conditions than attics are. Vented attics perform better than vented cathedral ceilings for the same framing type (Goldberg et al. 1999). Although providing effective ventilation to attics with simple geometries is relatively easy and inexpensive, providing soffit and ridge ventilation to each individual cavity in a cathedral ceiling may be difficult or impractical. Improperly installed insulation can obstruct the area designed or intended to provide ventilation. (Tobiasson et al. 1994). An airtight ceiling plane, vapor retarder, and foam air chutes between the sheathing and the top of the insulation effectively control moisture in cathedral ceilings with fiberglass insulation (Rose 1995). Hens and Jannsens (1999) pointed out that moisture control is ensured only if airtightness is effective and can be maintained. They showed that air entry and wind washing in insulated cathedral ceilings lead to degraded thermal performance, moisture response, and overall durability. TenWolde and Carll (1992) showed that ventilation of roof cavities may increase air leakage, and that the net moisture effect depends on whether the principal source of makeup air is from indoors or outdoors.

Goldberg et al. (1999) noted that unvented attics and cathedral ceilings retain thermal resistance of the fibrous insulation better than similar vented assemblies, though this benefit is smaller for attics than for cathedral ceilings. With careful attention to design for air- and vaportightness, unvented cathedral ceilings can be expected to perform satisfactorily in cold heating climates.

Operating Practices

Details of indoor humidity control are discussed in the section on Indoor Humidity Control. Buildings in heating climates should not operate at substantial positive indoor air pressures, which drive moist air into the building envelope and increase the potential for moisture accumulation. Avoid large negative pressures also if any unsealed combustion equipment is operated in the building. Negative pressure in the basement or in slab-on-grade buildings should also be avoided when there is potential radon leakage from soil into the building, unless a subslab depressurization system has been installed.

Other Considerations

In heating climates, it is important to design for excessive indoor humidity. If the anticipated indoor humidity is high, then extra care must be taken in design and construction by using air barriers in conjunction with building pressure regulation.

In general, mechanical equipment should be kept within the conditioned space of the building. This reduces the number of openings through the building envelope and reduces the energy losses associated with exterior equipment and ductwork. Several design options permit installing insulation below the roof plane, as in cathedralized construction (Rose 1995).

Example of Residential Wall Construction for Heating Climates

Figure 1 shows the cross section of a residential wall for heating climates. Moisture control is handled in the following ways:

- **Rain.** The brick veneer, an air space, and building paper form an effective rain screen. The air space behind the brick veneer provides a capillary break for any rainwater absorbed by the brick and mortar. Mortar should not breach the air space and touch the building paper, because this would allow rainwater to bypass the capillary break. The building paper protects the fiberboard or gypsum from any water penetrating the rain screen
- **Air movement.** The sheathing and building paper serve as an airflow retarder. Sufficient airtightness can be obtained by airtight installation of the sheathing (i.e., installed vertically with joints over the studs, with sealant or caulk used at joints).
- **Vapor diffusion.** Vapor diffusion from the inside is inhibited by the polyethylene vapor retarder.

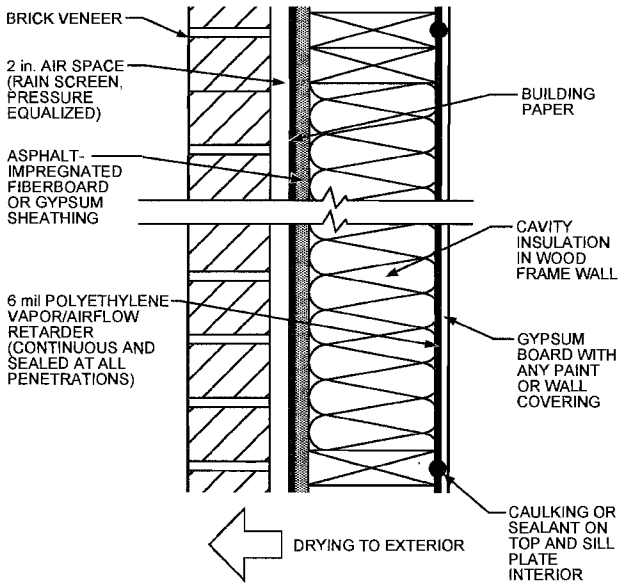

Fig. 1 Example of Residential Wall Construction for Very Cold (9000 Degree-Day) Heating Climates
Source: Lstiburek and Carmody (1991). Adapted with permission.

MIXED CLIMATES

Mixed or temperate climates are neither heating nor hot, humid climates, but may be heating- or cooling-dominated. This zone includes areas with hot and dry climates (e.g., Arizona). Buildings in mixed climates may encounter high interior humidity during winter and high exterior humidity during summer.

Summer cooling or winter heating for comfort in mixed climates does not usually create serious vapor problems in exterior walls and ceilings. The summer outdoor dew point, especially during peak values, may exceed the design dew-point temperature in common use, but it seldom exceeds 75°F for a prolonged period. Condensation within exterior walls exposed to an indoor temperature of 75°F is seldom as serious as winter condensation.

In a study of a wood-sided house in Athens, Georgia, Duff (1956) showed that, under summer cooling conditions, temperatures were lower outside than inside long enough to prevent moisture build-up from damaging the structure. This was true regardless of whether a low-permeance material was placed near the inner surface. However, masonry or brick-veneered structures with a low-permeance vapor retarder (e.g., vinyl wallpaper or polyethylene) near inner surfaces have moisture build-up under summer cooling conditions.

Vapor and Airflow Retarders

Airtight construction is recommended in all climates. Airflow retarders provide protection from excessive moisture accumulation in the building envelope during cooling and heating, and may reduce energy consumption. In mixed climates, most types of buildings have less need for low-permeance vapor retarders than in heating or warm, humid climates.

However, if a vapor retarder is necessary in a mixed climate, its placement presents somewhat of a dilemma. Under cooling conditions, a vapor retarder is normally located on the outside of the insulation. But under heating conditions, it would be located on the inner side. Using vapor retarders at both locations is undesirable because it restricts moisture movement into the insulation as well as the escape of any moisture. In dwellings, the vapor retarder should be placed to protect against the more serious condensation (winter or summer). However, if indoor humidity is kept below 35% (at 70°F) during winter, a vapor retarder on the inside of the insulation is probably not necessary in mixed climates.

The choice and placement of a vapor retarder, airflow retarder, and other materials minimize the potential for condensation and allow some drying. For example, if a vapor retarder is installed on the interior, an exterior airflow retarder and/or sheathing should have sufficient permeance to allow drying. The corresponding situation in cold storage buildings, in which a more serious reversal of vapor flow conditions from winter to summer may occur, requires individual analysis.

Attics and Cathedral Ceilings

Venting attics and cathedral ceilings during winter in a mixed climate has similar benefits and drawbacks as in a heating climate. Venting may benefit moisture control in attics where effective vents can be installed relatively easily and cheaply, and where the ceiling is tightened against air leakage. Unvented cathedral ceilings can provide satisfactory moisture performance in mixed climates when the system (1) is designed to control moisture migration, and (2) contains an airflow retarder that is maintained. More detailed discussion of ventilation of attics and cathedral ceilings can be found in the sections on Attics and Cathedral Ceilings, under Heating Climates.

Both vented and unvented construction should be designed and constructed to exclude interior moisture from cathedral ceiling cavities. As in heating climates, vents in cathedral ceilings may be less effective and beneficial than vents in attics; therefore, vents should be considered a design option.

Ductwork should be kept in the conditioned space of the building to improve energy efficiency. In hot, dry climates, energy loss through ductwork located in unconditioned attics is greater than energy loss in attics using cathedral construction, in which the insulated envelope is located at the roof (Rudd and Lstiburek1998).

Example of Residential Wall Construction for Mixed Climates

Figure 2 shows an example of a residential wall detail for mixed climates, with rigid insulating sheathing serving as a vapor and air retarder. Moisture control is handled in the following ways:

- **Rain.** The combination of siding and airtight foam sheathing serves as a screen system and controls rain penetration. Air cavities behind the siding should be sufficient to act as a capillary break. If the air space is insufficient, the siding may be installed on furring strips to provide the air space. With vinyl or aluminum siding, liquid absorption and capillary moisture transfer are not a concern.
- **Air movement.** The rigid insulating sheathing can be caulked at the top and bottom plates and at the joints to provide an exterior airflow retarder. Alternatively, caulking of the gypsum board can provide an interior airflow retarder.
- **Vapor diffusion.** The impermeable rigid insulation acts as a vapor retarder. During cooling periods, vapor diffusion from the outside is impeded at the exterior sheathing surface. During heating periods, vapor diffusion from the inside is inhibited at the interior surface of the foam sheathing. To minimize moisture condensation, this first condensing surface temperature should be elevated through the use of foam sheathing with a high R-value. For mixed climates, the thermal resistance of the insulating sheathing in this example should be R-7 or greater, with R-11 thermal resistance in the cavity.

WARM, HUMID CLIMATES

Warm, humid cooling climates are defined as climates where one or both of the following conditions occur: (1) a 67°F or higher wet-bulb temperature for 3000 or more hours during the warmest six consecutive months of the year, or (2) a 73°F or higher wet-bulb

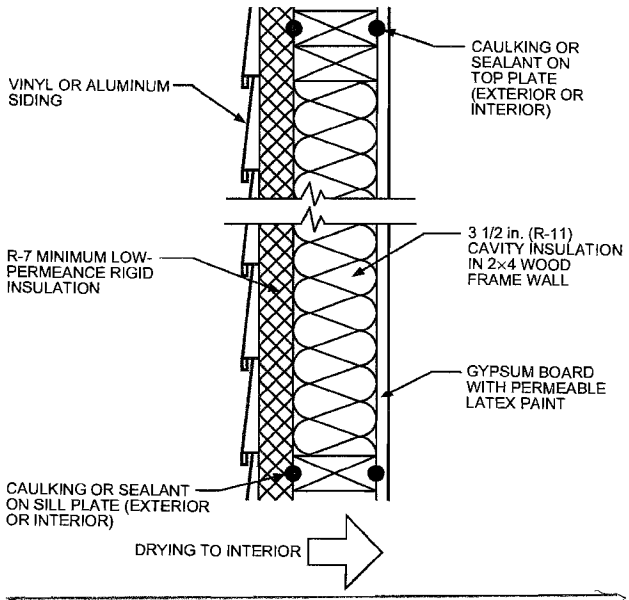

Fig. 2 Example of Residential Wall Construction for Mixed Climates

Source: Lstiburek and Carmody (1991). Adapted with permission.

temperature for 1500 or more hours during the warmest six consecutive months of the year. Depending on local experience with moisture problems, humid climate design criteria may also be desirable in locations that do not quite meet the foregoing conditions.

In these climates, dehumidification by air conditioning or other means is the most practical approach to moisture removal from the conditioned space. The overall latent-cooling load is composed of diffusion, ventilation, infiltration, and internally generated latent cooling loads. Because the latent-cooling load on an air conditioner in high-humidity climates frequently exceeds the sensible load, a system should be capable of handling the latent load without overcooling. In residential buildings, oversized air conditioners may not alleviate high humidity because of short cycling. Solutions include proper sizing of the system, using reheat, or design for variable flow rates.

Airflow and Water Vapor Retarders

Construction should be airtight, as in all other climates. Many moisture and condensation problems in cooling climates are caused by excessive leakage of outside air into the building envelope. Airflow retarders in cooling climates are best placed on the exterior. Negative pressures of the indoor space should be avoided. In high humidity, ambient water vapor diffuses through building materials from the outside into air-conditioned spaces. Exterior surfaces should have lower permeance than interior surfaces. Paints and finishes can provide the necessary permeance, with lower permeance at the outside surface and higher permeance toward the inside.

Low-permeance paints, vinyl wallpaper, or any other similar low-permeance material should not be used on the inside of walls and ceilings in warm, humid cooling climates.

Vapor retarders, if used, should be on the outside of the insulation. Then, any water vapor that enters the construction can flow to the inside of the building, where it can be removed by the air conditioner instead of accumulating in the wall or roof. Note that this recommendation is the reverse of the recommended practice for cold climates.

Attics and Cathedral Ceilings

The usual rules for attic and cathedral ceiling construction (ventilation and vapor retarder toward the inside) pertain to cold climates and not to warm, humid climates with indoor air conditioning. Common sense suggests that venting with relatively humid outdoor air means higher levels of moisture in the attic or cathedral ceiling. Higher moisture levels in vented attics in hot, humid climates do not lead to moisture damage in sheathing or framing. However, higher moisture levels in attic cavities may affect chilled surfaces of the ceiling and cold surfaces of mechanical equipment. When cooling ducts are located in the attic space, attic ventilation with humid outdoor air may increase the chance of condensation on the ducts.

As in all climates, airtight construction is desirable. In warm, humid climates, airtight construction usually reduces the latent load. Insulation and interior finishes should be selected and installed for vapor diffusion that is primarily inward.

As with other climates, a ventilated attic in a warm, humid climate is noticeably cooler in the summer than an unventilated attic. Beal and Chandra (1995) found that venting can greatly affect the temperature difference across the ceiling.

Other Considerations

To encourage drying, shaded exterior surfaces that do not benefit from the evaporative effects of sun and wind (e.g., inside corners) should be avoided or minimized. Building components that are prone to thermal bridging (e.g., exterior cantilevers, columns, foundations, window and door frames) are of special concern. Although these solutions may not totally eliminate mold and mildew growth, they substantially reduce the potential.

Serious wetting within walls can occur in summer under certain conditions. The National Research Council of Canada (Wilson 1965) tested the walls of huts of brick masonry finished inside with furring, insulation, a vapor retarder, and plasterboard. The walls were opened during a sunny period following rain. Extensive wetting was observed in the insulation, particularly on the back of the vapor retarder. The absorptive brick wall had accumulated substantial quantities of water during the rainfall. Subsequent heating by the sun had driven the moisture as vapor into the wall, where it condensed and caused serious wetting. The construction had no protection in the form of parging or paper on the inside of the brick.

The study showed that walls with exterior coverings capable of absorbing and storing considerable quantities of water during a rain, and providing little resistance to vapor flow into the insulation from outdoors, may experience serious interior wetting by condensation. No wetting occurred in a similar construction when a saturated sheathing paper was placed between the insulation and the brick. Thus, a moderate vapor flow resistance, such as that provided by parging or a good sheathing paper on the outside of the insulation, can effectively stop vapor flow in such cases.

Operation and Maintenance

Because the potential for damage to a building and its contents is substantial in an air-conditioned building in humid climates, it is more important to properly operate and maintain the building and its air-conditioning system. The chilled-water supply temperature and flow should be reliable, and multiple chillers and pumps should be considered to ensure continuous uninterrupted dehumidification.

Raising the chilled-water supply temperature to conserve energy should not be attempted under these conditions, because this would impair the dehumidification capacity of the air-conditioning system.

Lowering the cooling thermostat setting generally increases the chance for mold and condensation in exterior walls, especially where cooled air is blown directly towards the wall.

Example of Residential Wall Construction for Warm, Humid Climates

Figure 3 shows an example of a residential wall detail for warm, humid climates, with rigid insulation serving as a vapor retarder and airflow retarder. Moisture control is handled in the following ways:

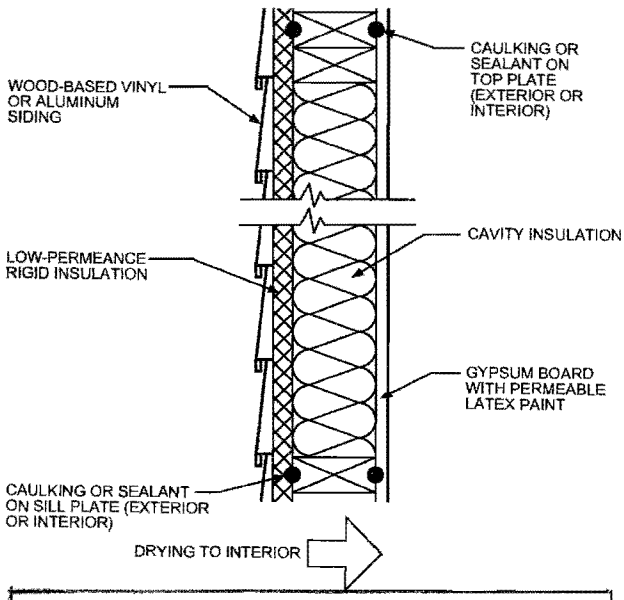

Fig. 3 Example of Residential Wall Construction for Warm, Humid Climates
Source: Lstiburek and Carmody (1991). Adapted with permission.

- **Rain.** The combination of airtight foam sheathing and siding serves as a rain screen system and controls rain penetration. Air cavities behind the siding should be sufficient to act as a capillary break. If air space is insufficient, the siding may be installed on furring strips to provide the air space. With vinyl or aluminum siding, liquid absorption and capillary moisture transfer are not a concern. Wood siding may be backprimed to prevent moisture absorption through the back, and wedges and clips on wood lapped siding should be considered to minimize capillary transport between boards.
- **Air movement.** The exterior sheathing is the best location for an air seal, using either an adhesive or caulk to fasten sheathing to framing members.
- **Vapor diffusion.** In warm, humid climates, the dominant source of moisture is outside air, and moisture is typically driven toward the interior. Thus, the best location for the vapor retarder is at or near the exterior wall surface. Vapor-permeable paint should be used on the interior gypsum wallboard.

MEMBRANE ROOF SYSTEMS

Because most membrane roof systems in commercial and institutional construction are highly resistant to vapor leakage, condensation must be prevented when insulation is placed between the heated interior and the roof membrane. Wet insulation in low-slope roof construction is difficult to dry. Drainage is likely to be so slow as to be ineffective. Ventilation to the outside is not effective for drying roof insulation, because forces acting to remove the moisture are small. The vents themselves may present a hazard to the insulation by admitting moisture and drifting snow. Also, water leaks can occur where the vents penetrate the roof unless they are properly installed. Finally, vents may allow chimney action to carry air upward through openings in the deck and ceiling. Then, as air flows to the outside, further moisture is drawn into the roof with the replacement air and may condense.

A vapor retarder in a conventional flat roof can trap moisture in the roof cavity. The decision whether to use a vapor retarder depends on interior humidity and climate. The absence of a vapor retarder allows vapor to enter a roof during the heating season, but also facilitates moisture removal in warm weather. This may not be acceptable in buildings with high indoor humidity or in extremely cold climates, when a large accumulation of frost or liquid condensation results in dripping. Where humidities are lower, or the climate less severe, the roof system may successfully store moisture through the heating season without problems (Baker 1980). The success of this strategy, however, also depends on the airtightness of the roof assembly. More information on this can be found in the section on Self-Drying, Low-Slope Roof Systems.

Regular inspection of the membrane and flashings helps prevent water leakage into the roof. Infrared scanners or capacitance meters can help detect wet insulation, which can be removed or possibly dried out.

Inverted Roof Systems

The top layers in protected membrane or inverted roof systems are not waterproof; therefore, insulation is exposed to rainwater. To remain effective, it must be able to resist moisture penetration. Extruded polystyrene board has been used extensively. Insulation moisture content commonly ranges up to 4 or 5% by volume.

Some insulations are damaged by freezing and thawing, which fracture cell walls and allow water into an otherwise low-permeance material. When free moisture is available, the rate of entry increases rapidly as the temperature gradient increases (Hedlin 1977). Even when insulation is immersed in ponded water, moisture absorption through the edges is less than through the upper and lower surfaces, because the temperature gradient is normal to the roof surface.

Protective measures can reduce moisture gains. Roof slope performs much the same function for protected membrane roofs as it does for conventional ones. Covering the bottom surface of the insulation with a low-permeance layer inhibits moisture entry there. The upper surface should be open to the atmosphere so that water can evaporate freely. If it is trapped against the upper surface (e.g., by paving stones), solar heating may drive the water into the insulation.

Where high thermal resistance is required, roofs may combine conventional and protected membrane systems when they are applied in two separate lifts. The protected membrane system may be applied to existing conventional roofs to increase the thermal resistance, if the roof structure can support the added weight. This addition keeps the roof membrane warmer, so that the chance of moisture condensation on the underside of the roof membrane is significantly reduced.

Self-Drying, Low-Slope Roof Systems

A major cause of roof replacement is excessive accumulation of water in the roofing system. Traditionally, this accumulation has been minimized by delaying its entry into the roofing system by using improved roofing membranes and periodic planned maintenance. Of course, most roofing systems eventually leak. Without periodic inspection, small leaks in a roofing system containing a vapor retarder or some other low-permeance layer (e.g., an asphalt mopping) can go undetected for long periods and lead to a major roof system failure. The self-drying roof facilitates controlled outflow of water vapor into the building interior, preventing long-term accumulation in the roof. Although they have not been optimized, the roofing industry has constructed self-drying roofs for many years. A roof installed without a vapor retarder or a low-permeance layer is effectively a self-drying roof.

A self-drying roof should be considered whenever the average yearly vapor drive is into the building interior. Tobiasson and Harrington (1985) produced vapor drive maps for the continental United States. Desjarlais (1995) found that vapor drive to the interior is satisfied for climatic regions having less than 8800 heating degree-days (65°F base).

The self-drying roof system must be carefully designed and include special features. The deck system must be reasonably permeable to water vapor to maximize downward drying. Water vapor

ASHRAE Standard 62:

62-2001, Paragraph 5.10 - 5.11

ANSI/ASHRAE Standard 62-2001

(Including ANSI/ASHRAE Addenda listed in Appendix H)

ASHRAE STANDARD

Ventilation for Acceptable Indoor Air Quality

See Appendix H for approval dates by the ASHRAE Board of Directors and the American National Standards Institute.

This standard is under continuous maintenance by a Standing Standard Project Committee (SSPC) for which the Standards Committee has established a documented program for regular publication of addenda or revisions, including procedures for timely, documented, consensus action on requests for change to any part of the standard. The change submittal form, instructions, and deadlines are given at the back of this document and may be obtained in electronic form from ASHRAE's Internet Home Page, *http://www.ashrae.org*, or in paper form from the Manager of Standards. The latest edition of an ASHRAE Standard may be purchased from ASHRAE Customer Service, 1791 Tullie Circle, NE, Atlanta, GA 30329-2305. E-mail: *orders@ashrae.org*. Fax: 404-321-5478. Telephone: 404-636-8400 (worldwide), or toll free 1-800-527-4723 (for orders in U.S. and Canada).

ISSN 1041-2336

Approved American National Standard

ANSI

AMERICAN SOCIETY OF HEATING, REFRIGERATING AND AIR-CONDITIONING ENGINEERS, INC.

1791 Tullie Circle, NE · Atlanta, GA 30329

sorption with or without oxidation or other scientifically proven technology shall be used. Such methods may be tailored to deal with a specific contaminant. A commonly used sorbent is activated carbon. The selection of gaseous contaminant control equipment for recirculation systems must consider the concentration, toxicity, annoyance, and odor properties of the contaminants present and the levels to which these must be reduced to be effective in maintaining air quality. The performance of gaseous contaminant removal devices often depends strongly on the physical and chemical properties of the individual contaminants present, on the temperature and humidity of the air, on the air velocity through the device, and its loading capacity.

5.10 High humidities can support the growth of pathogenic or allergenic organisms (see Reference 19). Examples include certain species of fungi, associated mycotoxins, and dust mites. This growth is enhanced by the presence of materials with high cellulose, even with low nitrogen content, such as fiberboard, dust, lint, skin particles, and dander. Areas of concern include bathrooms and bedrooms. Therefore, bathrooms shall conform to the ventilation rates in Table 2.3. Relative humidity in habitable spaces preferably should be maintained between 30% and 60% relative humidity (see Reference 10) to minimize growth of allergenic or pathogenic organisms.

5.11 Microbial contamination in buildings is often a function of moisture incursion from sources such as stagnant water in HVAC air distribution systems and cooling towers. Air-handling unit condensate pans shall be designed for self-drainage to preclude the buildup of microbial slime. Provision shall be made for periodic in-situ cleaning of cooling coils and condensate pans. Air-handling and fan coil units shall be easily accessible for inspection and preventive maintenance. Steam is preferred as a moisture source for humidifiers, but care should be exercised to avoid contamination from boiler water or steam supply additives. If cold water humidifiers are specified, the water shall originate from a potable source, and, if recirculated, the system will require frequent maintenance and blow-down. Care should be exercised to avoid particulate contamination due to evaporation of spray water. Standing water used in conjunction with water sprays in HVAC air distribution systems should be treated to avoid microbial buildup. If the relative humidity in occupied spaces and low velocity ducts and plenums exceeds 70%, fungal contamination (for example, mold, mildew, etc.) can occur. Special care should be taken to avoid entrainment of moisture drift from cooling towers into the makeup air and building vents.

6. PROCEDURES

This section is not required for natural ventilation systems; natural ventilation systems shall be designed in accordance with Section 5.1.

Indoor air quality is a function of many parameters including outdoor air quality, the design of enclosed spaces, the design of the ventilation system, the way this system is operated and maintained, and the presence of sources of contaminants and the strength of such sources. This standard deals with the design of a ventilation system as it is affected by all these factors, so that an acceptable level of indoor air quality can be provided. Design documentation shall clearly state which assumptions were used in the design so that the limits of the system in removing contaminants can be evaluated by others before the system is operated in a different mode or before new sources are introduced into the space.

Indoor air should not contain contaminants that exceed concentrations known to impair health or cause discomfort to occupants. Such contaminants include various gases, vapors, microorganisms, smoke, and other particulate matter. These may be present in makeup air or be introduced from indoor activities, furnishings, building materials, surface coatings, and air-handling and air treatment components. Deleterious factors include toxicity, radioactivity, potential to induce infection or allergies, irritants, extreme thermal conditions, and objectionable odors.

The Ventilation Rate Procedure (6.1) provides one way to achieve acceptable air quality. This procedure prescribes the rate at which ventilation air must be delivered to a space and various means to condition that air. The ventilation rates in Table 2 are derived from physiological considerations, subjective evaluations, and professional judgments (see References 11-17).

The Indoor Air Quality Procedure (6.2) provides an alternative performance method for achieving acceptable air quality. This procedure uses one or more guidelines for the specification of acceptable concentrations of certain contaminants in indoor air but does not prescribe ventilation rates or air treatment methods.

6.1 Ventilation Rate Procedure: This procedure prescribes:

- the outdoor air quality acceptable for ventilation
- outdoor air treatment when necessary
- ventilation rates for residential, commercial, institutional, vehicular, and industrial spaces
- criteria for reduction of outdoor air quantities when recirculated air is treated by contaminant-removal equipment
- criteria for variable ventilation when the air volume in the space can be used as a reservoir to dilute contaminants.

6.1.1 Acceptable Outdoor Air. This section describes a three-step procedure by which outdoor air shall be evaluated for acceptability:

Step 1: Contaminants in outdoor air do not exceed the concentrations listed in Table 1 as determined by one of the following conditions:

(d) Monitoring data of government pollution-control agencies, such as the U.S. Environmental Protection Agency (EPA) or equivalent state or local environmental protection authorities, show that the air quality of the area in which the ventilating system is located meets the requirements of Table 1. Conformity of local air to these standards may be determined by reference to the records of local authorities or of the National Aerometric Data Bank, Office of Air Quality Planning and Standards, EPA, Research Triangle Park, NC 27711, or

(e) The ventilating system is located in a community similar in population, geographic and meteorologi-

ASHRAE Standard 62:

Improvements to 62.1 (Summer 2008)

Looking to the Future

Improvements to 62.1

By Dennis A. Stanke, Fellow ASHRAE

In my view, the continuous maintenance process has worked well for ANSI/ASHRAE Standard 62.1. In response to change proposals from the public and changes motivated by interpretation requests, as well as by individual committee members, eight addenda modified the 2004 version, resulting in the 2007 publication. Thirteen addenda to modify the 2007 version prior to republication in 2010 are either approved for publication or in process. After a brief overview of these addenda (below) I thought it would be a good time to look a little bit further into the future or, at least, as I see the future.

Changes to Standard 62.1-2004

What changes were incorporated into the 2007 version, compared to the 2004 version? Summarized in Appendix I of Standard 62.1-2007, the most important changes, in my view, included the following:

Section 5.10 Dehumidification Systems was modified to help designers understand that HVAC system designs must be analyzed at conditions of high outdoor latent load and low indoor sensible load, to show that predicted space relative humidity will not exceed 65% RH. System configuration and control approaches that allow high space relative humidity can result in increased water-activity levels at surfaces within the space. And, high water-activity levels can result in microbial growth on surfaces.

Occupancy category entries in Tables 5-2, 6-1, and 6-4 were revised to improve consistency, avoid confusion among the tables, and simplify the standard. For example, Table 5-2, which listed air classes for other spaces, was eliminated and all of its occupancy categories were moved to either Table 6-1 Minimum Ventilation Rates in Breathing Zone or Table 6-4 Minimum Exhaust Rates.

Section 5.18 Requirements for Buildings Containing Environmental Tobacco Smoke (ETS) Areas and ETS-Free Areas was added. It provides minimum requirements for proper separation of areas with environmental tobacco smoke (usually smoking-permitted areas) from areas without ETS (ETS-free areas, which are always smoking-prohibited areas). These requirements help reduce the ETS levels in those areas designated as ETS-free.

Table 6-1 Minimum Ventilation Rates in Breathing Zone was modified to include minimum outdoor airflow rates for occupancy categories found in residential buildings with more than three stories. Previously, these rates had been included in Appendix Table E-2 "Outdoor Air Requirements for Ventilation of Residential Facilities." These earlier rates were legacy rates introduced in 1989 and applied largely to single-family dwellings. These rates needed updating to fit the new ventilation rate procedure introduced in 2004 (i.e., an outdoor airflow rate per person, as well as a rate per unit area needed to be considered for each residential occupancy category). The Standard 62.1 rates are higher than those found in Standard 62.2 for residential buildings three stories or less. Unlike low-rise, high-rise residential buildings—the purview of Standard 62.1—cannot logically take credit for air leakage through the building structure.

Expected Changes to Standard 62.1-2007

How can the standard be expected to change in the near future? SSPC 62.1 has been working on several addenda, including:

*Addendum 62.1*a *Section 4 and 5 Cleanup* was initiated to eliminate inconsistencies and clarify some of the requirements in Sections 4 and 5 of the standard. Approved and ready to publish, this addendum will be included in the August 2008 Supplement.

*Addendum 62.1*b *Informative Appendices* corrects and clarifies wording in informative Appendix C "Rationale for Minimum Physiological Requirements for Respiration Air Based on CO_2 Concentration," Appendix D "Acceptable Mass Balance Equations for Use with the IAQ Procedure," and Appendix F "Separation of Exhaust Outlets and Outdoor Air Intakes." Approved and ready to publish, changes made by this addendum will be included in the August 2008 Supplement.

*Addendum 62.1*c *Outdoor Air Cleaning* was initially intended simply to update Section 6.2.1 Outdoor Air Treatment requirements to match up with changes to the National Ambient Air Quality Standards (NAAQS). However, along the way, it has picked up additional air cleaning requirements, resulting in increased stringency. In its current form, this addendum requires MERV 11 filters for all systems in PM2.5 nonattainment areas. It also requires 40% ozone air cleaners in all one-hour ozone nonattain-

ASHRAE Standard 62:

62.1: First Cost and Energy Impacts (Fall 2007)

Engineers Should Balance the Need

Standard 62.1: First Cost and Energy Impacts

By Dennis A. Stanke, Fellow ASHRAE

I had a chance to attend the Region VII Chapters Regional Conferences (CRC) in Huntsville, Ala. This year's theme was "Going Green in Region VII." I gave a presentation about ANSI/ASHRAE Standard 62.1 requirements, attempting to highlight how they might impact both first cost and operating energy.

Terry Townsend, P.E., Fellow/Presidential Member ASHRAE, gave the keynote speech, emphasizing the urgent need to address energy use in our lives and especially within our industry. His speech seemed to lay out the climate-change facts and was just a little bit frightening for me, but at the same time, inspiring. In fact, it inspired me to write this quarterly column about the potential impact of Standard 62.1 requirements on building energy use.

The following paragraphs discuss energy-related aspects of some key Standard 62.1 requirements. All of these requirements, if met, should improve IAQ; some of them increase energy use, but some may actually help save energy while improving IAQ.

5.0 Systems and Equipment. Many of the general requirements in this section help to establish a "typical" level for indoor contaminant sources, so that the ventilation rates prescribed in Section 6 can be expected to "work" in most cases.

5.1 Natural Ventilation. Buildings can be ventilated without using mechanical fans, provided the design meets minimum requirements for size of and access to openings. Naturally ventilated systems may save operating energy, in terms of both fan horsepower and perhaps mechanical cooling, and in some climates at the right outdoor conditions.

5.2 Ventilation Air Distribution. Ventilation systems must be designed so that they can be "air-balanced" to ensure that the occupied zones actually receive the intended outdoor air. Proper air balancing contributes to zone comfort in terms of both thermal comfort and acceptable IAQ. However, improper air balancing might lead to inappropriate duct pressure, which can result in excessive air leakage into or out of the duct, or it might lead to excessive infiltration or exfiltration through the building envelope, which can result in significant unnecessary energy use in terms of increased fan energy and/or thermal load.

5.4 Ventilation System Controls. Mechanically ventilated systems must be designed to provide the minimum required ventilation, so the designer must provide controls to enable fan operation when occupied. It goes without saying that turning the fan on contributes to acceptable IAQ during occupied hours, but turning it off during unoccupied hours can save considerable operating energy. Unoccupied operation of supply fans, or more likely, local exhaust fans, can result in significant unnecessary energy use.

5.9 Particulate Matter Removal. Systems with wet surfaces in the supply air stream must include MERV 6 filters (per ANSI/ASHRAE Standard 52.2) to reduce the rate of dirt accumulation. Dirt on dehumidifying coils can lead to IAQ problems for two reasons: dirt plus water may encourage microbial grow on the coil, but dirt buildup on coil surfaces increases local air velocity. Higher coil-air velocity increases water droplet carryover, which leads to wet downstream surfaces; a wet surface with just a small amount of dirt can support microbial growth. In terms of energy use, dirty coils increase coil pressure drop, so the fan requires more horsepower to deliver the same airflow, and wet insulation downstream reduces insulating effect, which means cooling energy loss.

5.10 Dehumidification Systems. Mechanical systems with dehumidification capability must be designed to limit space relative humidity to 65% or less at the design dew-point condition. Avoiding excessive relative humidity reduces the potential for microbial growth on space surfaces, so it helps with IAQ, but it takes more energy to remove moisture than to simply ignore it. Constant volume HVAC systems with sensible-only thermostatic control—especially those in hot, humid climates—probably don't meet this 65% RH limit without some type of dehumidification enhancement, such as site-recovered reheat or return air bypass.

5.11 Drain Pans. Condensate drainage systems must be designed so that water drains out of the drain pan. Among other things, drain seals or P-traps must be designed to prevent ingestion of ambient air while allowing complete drainage with the fan on or off. Ingestion of ambient air results in water droplet carryover beyond the drain pan. This means wet downstream surfaces. As mentioned above, wet insulation downstream increases the risk of microbial growth and reduces insulating effect, which means reduced IAQ and loss of cooling energy.

Indoor Air Quality (IAQ):

IAQ After a Disaster (Winter 2008)

Indoor Air Quality (IAQ):

No Quick Fixes for Preventing Mold (2003)

No Quick Fixes For Preventing Mold

Mold prevention, response to complaints and remediation is a multidisciplinary effort that may require input from health, property management, engineering and legal expertise. While the cause — moisture — is simple, there are no quick fixes. Those that claim to be are merely marketing opportunities.

By Larry Schoen, P.E.
Member ASHRAE

I recently participated in a Building Owners and Managers Association-sponsored Audio Seminar, "Balancing Tenant Needs and Regulatory Responsibility: A Case Study on Mold." The purpose of the seminar was to educate property managers (primarily those responsible for office buildings) about how the unfolding mold scare affects their operations.

Tomi Sue Beecham of Trammell Crow Company, facilities partner for Bank of America in San Antonio, moderated it. Participants joining me in the seminar discussion included Courtney DeBord, regional environmental protection specialist, GSA; Cliff Horner, attorney; Jim Kelaher, M.D., director of occupational health, Baylor College; and Lance Smith, attorney.


Schoen

The format of these telephone-based seminars is impressive. The panelists shared written materials and participated in two conference calls to prepare our presentation. We acquainted ourselves with the special headsets for use during the seminar. For the seminar itself, more than 50 sites participated, with one to 15 participants at each site. During questions, audience members can press a phone button to queue up. They can speak to the panel only when the facilitator enables their audio.

Afterwards, participants are polled for evaluations and panelists are sent a recording of the seminar.

I don't have enough space to cover the entire two-hour seminar, but I will give some highlights.

The preliminary discussion centered on the basics of mold, the regulatory environment, and recent highly publicized lawsuits. Everyone agreed that media hype is responsible for exaggerated concern about mold.

I gave the audience information about sections of ASHRAE's Standard 62 that address mold and moisture control in buildings.

Kelaher surprised several of the panelists when he said that from a medical point of view, there was no reason to get overly concerned about the presence of a particular mold species. He said this despite the public attention being focused on species such as *Stachybotrys*, *Aspergillus* and *Cladisporium*.

One of the lawyers said that this was contrary to what his IAQ consultants have been telling him, but Kelaher reaffirmed his opinion. He had told the panel earlier that none of the well-publicized lawsuits has produced even so little as a firm diagnosis of mold-induced illness.

The lawsuits have instead focused on the failure of plaintiffs, such as insurance companies, to act on their duties. Some insurance companies have responded to the increasing quantity of claims and damage awards by increasing premiums, creating mold exclusions and, in some cases, pulling out of markets completely. This has affected not only homeowners, but also owners and managers of commercial property.

The lawyers presented some potential language to place in leases. However, when asked whether landlords should present tenants with this language, the lawyers said no. I think their strategy is to have the lease language available in case the tenants ask or come up with their own objectionable clauses. It seems to me that one downside is the possibility of running up enormous legal fees negotiating mold clauses in leases, professional service agreements, etc.

Considerable discussion centered around preventing mold and moisture problems by proper design, construction and operation of buildings. Then, the discussion moved to mold remediation and testing. Last year, the EPA published a guide to remediation (www.epa.gov/iaq/pubs/moldresources.html). All agreed that this manual gives appropriate guidelines.

It was also pointed out that New York City has published similar information at http://www.ci.nyc.ny.us/html/doh/html/epi/moldrpt1.html#enviro.

An area of disagreement concerned testing. At the risk of oversimplification, let me characterize the attorneys as being on the side of testing while the property managers and I were against it. Our reasons include the limited correlation between test data and comfort problems, test data that does not point you to the location of the mold or remediation required, and the visibility of biological contamination whenever a severe moisture problem

has caused mold growth. The test data are nonconclusive and not helpful, while the findings, colony counts and names of the organisms are frightening to occupants and property managers alike. We viewed it primarily as a comfort and building maintenance problem that is amenable to ordinary methods of building maintenance and tenant satisfaction. The lawyers seemed to feel that proper defense requires test data, despite the fact that the data might be scientifically meaningless.

Is it possible that consultants, who stand to gain financially from testing and who might therefore have a bias towards recommending it, are advising the lawyers? The lesson I take from this is that my clients or I may be forced someday to collect our own mold colony counts for reasons based solely on defensive legal maneuvering when plaintiffs produce data.

I have always been and remain a strong proponent of the occupant questionnaire in the U.S. Environmental Protection Agency's Building Air Quality manual (www.epa.gov/iaq/largebldgs/baqtoc.html). All on the panel agreed that occupant interviews are a good practice. However, Kelaher pointed out that some of the questions may border on intrusion into employees' private medical information. He urged caution.

Some callers and panel participants asked about UV lights in air-handling systems and antimicrobial treatments. I advised that these are not cure-alls, and are often not necessary and or effective. Testimonials are available on the UV method, but I have found no track record for them. One downside would be deterioration of lining, glues, flexible connections and sealants from the UV.

I would recommend pursuing other methods that dry out the air handler and keep it clean. Shortly after the seminar, ASHRAE's eNewsletter reminded me of the *ASHRAE Journal* article, "Efficacy of Antimicrobial Filter Treatments," written by Karin K. Foarde, James T. Hanley and Alan C. Veeckin in December 2000.

While the article addresses only filters and not duct linings and other substrates, it demonstrates the impact that field variables can have on the efficacy of such methods. Even though a treatment chemical may be effective in the lab, this does not translate into effectiveness in the field. From the current state of knowledge, in my opinion, the antimicrobial treatments are not the solution.

"For filter media that is susceptible to growth, an antimicrobial may be effective," according to the article. "However, if the media is inherently hostile to growth, then an antimicrobial may not be needed.... For filters where growth was seen on untreated dust-loaded media, growth was seen on the treated, dust-loaded counterpart."

Mold prevention, response to complaints and remediation is a multi-disciplinary effort that may require input from health, property management, engineering and legal expertise. While the cause — moisture — is simple, there are no quick fixes. Those that claim to be are merely marketing opportunities. *Keep buildings clean and dry.*

Larry Schoen, P.E., is president of Schoen Engineering, Columbia, Md. He serves on ASHRAE Standing Standards Committee 62.1 and can be reached at Larry@SchoenEngineering.com.

What Your AC Contractor Doesn't Know Could Hurt You

By James B. Cummings
Member ASHRAE

Recently, I was called to a commercial building in central Florida that had high indoor humidity and water dripping from attic ducts and air handlers. The building was a residence that had been converted into an office in 1979 and an attached addition constructed in 1989. A suspended T-bar ceiling had been installed in the "house" and the plaster ceilings had been penetrated in several locations. In the addition, only a suspended T-bar ceiling (with insulation batts on top) separated the conditioned space from a vented attic. Since 1979 an attic exhaust fan had operated in the "house" attic.

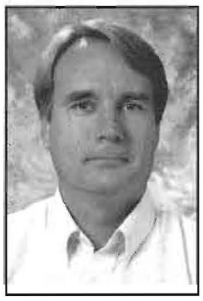
Cummings

The owner noticed a problem of dripping ducts (ceiling water stains) in the addition a few years after its construction. An air-conditioning contractor's diagnosis was "insufficient attic ventilation." In response, the gable vent openings were expanded, but the ducts and air handlers continued to sweat. During the next 10 years, a series of additional modifications were made, typically during the summer or autumn, and the problems would disappear with the onset of winter. Each subsequent summer, the problems would resume and eventually become worse. In three stages, attic vent openings were increased from the initial 3 ft^2 to 10 ft^2 (0.21 m^2 to 1 m^2). In several stages, attic fans were installed. First, a 1,600 cfm (755 L/s) attic exhaust fan was installed in the addition to complement the "house's" 2,400 cfm (1130 L/s) attic fan. Because of depressurization concerns, a 1,000 cfm (470 L/s) attic makeup air fan was added to act in tandem with the exhaust. Subsequently, a second pair of matching attic exhaust and makeup air fans also were installed in the addition.

The owner became aware that indoor humidity was too high. While I was not involved with the building until recently, here is my brief read of the situation. In 1989, the entire building was depressurized by the "house" attic exhaust fan. Indoor humidity was elevated. Sweating occurred in the attic

Indoor Air Quality (IAQ):

"Fan On" Can Cause Problems (2002)

'Fan On' Can Cause Problems

... continuous fan operation can substantially increase both indoor humidity and HVAC energy use, and should be avoided when possible.

By James B. Cummings and **Hugh I. Henderson Jr., P.E.**
Member ASHRAE Member ASHRAE

As was discussed in the fall issue of IAQ, most air-conditioning systems will dehumidify if the compressor "on" cycles are at least 10 to 12 minutes. This assumes that the air handler's "fan on" periods coincide closely with the compressor operation. If the air-conditioning system is operated with continuous fan operation ("fan on"), it will dehumidify poorly. If you live in dry climates such as Denver or Las Vegas, this may not be a problem. If you live in Orlando, Fla., Houston or Atlanta, this is a critical issue.

Why does continuous fan operation cause poor dehumidification during hot and humid weather? There are three reasons, each based on the premise that the compressor does not operate all the time.

First, if ventilation air is introduced through the cooling system, then this air will not be dehumidified during "compressor off" periods, and humidity will therefore increase rapidly during compressor "off" periods.

Second, if there are duct leaks, and these leaks cause unconditioned air to be drawn into the building, then room humidity will increase in proportion to the size of those duct leaks.

Third, moisture evaporation from the cooling coil and drain pan re-introduces moisture into the space.

Let's look more closely at the moisture evaporation issue. When a DX air conditioner turns on, moisture starts to condense on the cooling coil after about one minute. However, it takes time for moisture to build up on the coil and then flow to the drain pan. Research has found that when the compressor cycles off, moisture remaining on the cooling coil is equivalent to 10 to 12 minutes of moisture removal under steady-state operation. As air continues to flow across these wetted surfaces, the system effectively becomes an evaporative cooler adding moisture back into the airstream. This degrades the system's dehumidification capacity. *Figure 1* shows that a cooling system's latent capacity is strongly a function of compressor runtime fraction (load factor). For the tested system, latent capacity almost disappears for compressor runtimes of less than 40%.

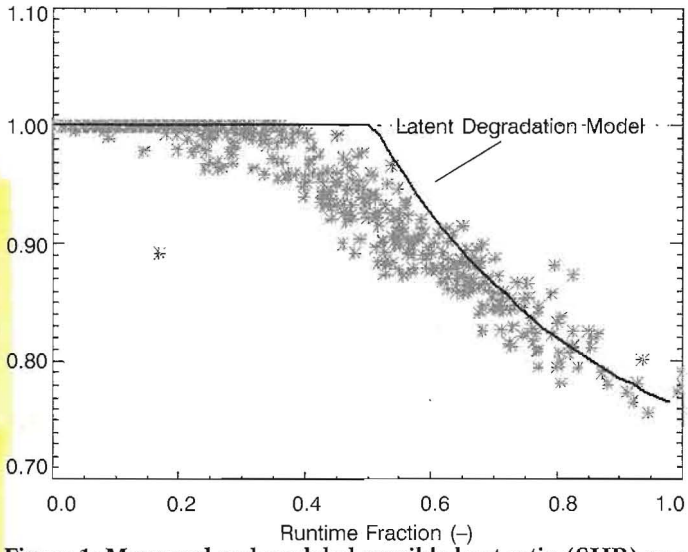

Figure 1: Measured and modeled sensible heat ratio (SHR) as a function of compressor runtime with continuous fan operation.[1]

Because considerable moisture is stored on the coil, the compressor must operate continuously for at least 10 to 12 minutes before significant dehumidification occurs. Therefore, the cycling behavior of the thermostat is critical for a system with continuous fan operation. A normal thermostat that has typical cycle lengths of 5 to 10 minutes may not produce latent cooling until a 70% compressor runtime fraction is achieved. A unit with 15 to 25 minute cycle lengths will produce some latent cooling even with low cooling loads.

If continuous fan operation is required, one approach that will improve dehumidification performance is a two-stage air conditioner. These are typically available as rooftop package units for commercial building applications. The thermostat activates the first stage compressor when the room temperature setpoint is not satisfied. Only when the first stage cannot meet the load will the second stage activate.

When operating in first stage, about half of the air goes through the first stage coil and half goes through the inactive (warm) coil. (This assumes a face split coil—in effect, two separate coils operating in parallel. A row-split coil will not produce good dehumidification performance.) Because of two-stage operation, the first stage coil is cold most of the time, and therefore the air passing through this coil is well-dehumidified and experiences little evaporation.

Continuous fan operation also im-

pacts cooling energy use. We have identified seven factors related to continuous fan operation affecting cooling energy use. One of these factors tends to reduce energy use while six tend to increase energy use.

1) Evaporation of moisture from the coil provides sensible cooling to the space, reducing total cooling energy use (in effect, the cooling system is meeting part or none of the latent load).

2) The fan consumes energy, so continuous fan operation consumes more energy.

3) The heat generated by the fan causes additional cooling load and air-conditioner energy use.

4) There will be increased conductive heat gains through the duct walls.

5) If the ductwork is not airtight, there will be increased air leakage to and from the air-distribution system.

6) Higher humidity will cause less comfort at room air temperature. Consequently, it may be necessary to lower the thermostat to maintain comfort. This, in turn, increases energy use. Typically, a 1°F (0.55°C) drop causes an 8% increase in cooling energy use.

7) High humidity may cause building occupants to install dehumidifiers in an attempt to control humidity, and dehumidifiers are generally an energy-inefficient means of moisture removal.

In summary, continuous fan operation can substantially increase both indoor humidity and HVAC-energy use, and should be avoided when possible.

References

1. Henderson, Hugh I. 1998. *"The Impact of Part-Load Air Conditioner Operation on Dehumidification Performance: Validating a Latent Capacity Degradation Model."* *IAQ 1998.* New Orleans. Paper 98–32.

James B. Cummings is a principal research analyst at the Florida Solar Energy Center in Cocoa, Fla. He is a voting member of Standards Project Committee 152P. Hugh I. Henderson, Jr., P.E., is a principal at CDH Energy Corp., Cazenovia, N.Y.

Protecting Buildings From Airborne Threats

... it will take a thoughtful process to put protective measures in place. There are no "silver bullets" or single answers to questions such as, "Should I shut down the air handlers in response to a threat?"

By Larry Schoen, P.E.
Member ASHRAE

Government and local authorities cannot be counted on to protect most buildings from ordinary and extra-ordinary airborne hazards. The building design, construction and operation community must do this, even though the government, for reasons that do not make sense to me, is withholding information and guidance that would make it easier for us to do so (with one notable exception, see Step 1 later).

Larry Schoen

It will take a thoughtful process to put protective measures in place. There are no "silver bullets" or single answers to questions such as, "Should I shut down the air handlers in response to a threat?"

In the space available here, you will find the outline of a process that can be used to think about and plan for protection of occupants of a building from hazards involving air contaminants. In the words of Sally Quinn in the Washington Post, Sunday, Dec. 9, "...the unthinkable is possible. And we have the daunting task of planning for the unthinkable."

The article quotes Peter Holbrook of Children's Hospital (who derived a mass catastrophe strategy) as saying, "Being prepared is the first step. It makes you feel better."

Step 1: Assemble a team, including building operations, security, management, occupants and engineering. Get a copy of "Protecting Buildings and Their Occupants from Airborne Hazards," available at http://128.11.25.81/pdfs/BuildingProtectionDraft10-24-01.pdf. I would like to thank Dennis Stanke of Trane for calling my attention to it. This document, prepared jointly by the U.S. Army Edgewood Chemical Biological Center (ECBC) and the Protective Design Center (PDC) of the U.S. Army Corps of Engineers, presents ways to protect building occupants from airborne hazards — to prevent, protect against, and reduce the effects of outdoor and indoor releases of hazardous materials.

It identifies protective measures that can be as simple as defining in a protective-action plan. Some of these protective measures are practical only for new construction, while others are suitable for retrofit of existing buildings. Others are security measures intended to prevent an internal or external release close to the building.

Also presented are low-cost, expedient measures—operational procedures for reducing vulnerability or for mitigating the hazard once a release has occurred. The following protective measures are presented:

- High-efficiency filters for removing gases and aerosols from makeup air;
- Recirculating filter units (indoor air purifiers) available commercially;
- Physical security and entry screening measures;
- Architectural and mechanical design measures; and
- Protective-action plans covering sheltering, evacuation, purging and pro-

Indoor Air Quality (IAQ):

Humidity Problem? Trade in Your Thermostat (2001)

Humidity Problem? Trade In Your Thermostat

The cause of the short cycling was the thermostat. The contractor who installed the new AC system told me this thermostat had an anticipator that improves comfort. The effect is less temperature swing between the start and end of each "on" cycle.

By James B. Cummings
Member ASHRAE

About six years ago, I had a new air-conditioning system installed in my house, and the indoor relative humidity went up from about 48% with the old unit to 70% with the new unit. Since humidity control is essential to comfort and indoor air quality (avoiding mold growth) where I live in Florida, this situation required immediate attention.

Several explanations for this dramatic increase in humidity are possible.

1) Duct leakage could have been created when the air handler was installed. This leakage could draw humid air into the house. However, a duct airtightness test found no significant leakage at the air handler.

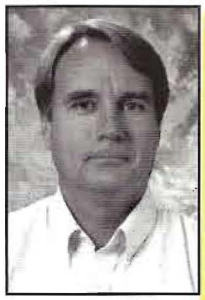

James Cummings

2) Another explanation is that oversized units dehumidify poorly because they do not run long enough to remove moisture. As it turned out, the replacement unit was 2.5 tons versus 3.5 tons (8.8 kW versus 12.3 kW) for the original unit.

3) Some may think that the new unit is a high efficiency unit and has inherently poor dehumidification performance. As it turned out, this unit had a SEER rating of 11.0, not exceptionally high.

4) The air handler airflow rate could be too high, causing a warmer coil temperature and less moisture removal. Measurements found airflows of about 380 cfm (179 L/s) per ton, or nearly right on target.

5) If the refrigerant charge doesn't meet specification, it could cause poor dehumidification performance. However, AC performance measurements of return and supply air temperature and humidity found an enthalpy drop of 6.6 Btu/lb of dry air and indicated a latent removal fraction of 0.33, fully within expectations. Nothing was wrong with the dehumidification potential of the system.

So what was going on? Careful observation of the AC system found that it was short cycling: turning on and off frequently. For example, during 50% load factor the unit would cycle on for six minutes, turn off for six minutes, and so on. Short-cycling produces poor dehumidification performance for two reasons. First, it takes the coil about three minutes to reach full dehumidification performance. Second, it takes additional time for the moisture to build up and start running off the coil. So, with a six minute "on" cycle, moisture is just getting to the drain pan when the cycle ends.

The cause of the short cycling was the thermostat. The contractor who installed the new AC system told me this thermostat had an anticipator that improves comfort. The effect is less temperature swing between the start and end of each "on" cycle. Inquiries to the manufacturer found that most thermostats are designed with this feature. Interestingly, cycle rate can be controlled on many thermostats, but only in the heating mode (to accommodate various heating system types). In the cooling mode, few thermostats allow cycle rate adjustment.

At my urgent request, the contractor replaced the thermostat with one that cycled less frequently. In fact, the minimum "on" period was 30 minutes. The result? Indoor relative humidity immediately dropped from 70% to 55%. But, you might think, does the long "on" cycle cause large temperature swings and discomfort? It, in fact, produced a 2.5°F (1.4°C) temperature swing between start and end of the "on" cycle, which did not produce noticeable discomfort.

Another way to improve cooling system dehumidification is to use a setback thermostat. The thermostat can be set to different temperatures typically for four periods each day. When the program goes to a lower temperature, this causes longer "on" cycles for a couple of hours as the mass of the building is gradually cooled to the lower temperature (this is partly a function of the thermal mass of the building).

The reader may be concerned about moisture buildup during extended "off" periods. I do not believe this is a major concern because of two factors. First, the building and furnishings possess considerable moisture storage capacity, which stabilizes humidity when the AC is off. Second, the rise in temperature during the "off" period tends to lower indoor relative humidity.

As a final thought, I hope manufacturers will make thermostats with the capability for cooling mode cycle rate adjustment.

James B. Cummings is a program manager at the Florida Solar Energy Center in Cocoa, Fla. He is a voting member of Standards Project Committee 152P.

LEED CERTIFICATION INFORMATION

What is LEED certification?

In the United States and in a number of other countries around the world, LEED certification is the recognized standard for measuring building sustainability. Achieving LEED certification is the best way for you to demonstrate that your building project is truly "green."

The LEED green building rating system -- developed and administered by the U.S. Green Building Council, a Washington D.C.-based, nonprofit coalition of building industry leaders -- is designed to promote design and construction practices that increase profitability while reducing the negative environmental impacts of buildings and improving occupant health and well-being.

What are the benefits of LEED certification?

LEED certification, which includes a rigorous third-party commissioning process, offers compelling proof to you, your clients, your peers and the public at large that you've achieved your environmental goals and your building is performing as designed. Getting certified allows you take advantage of a growing number of state and local government incentives, and can help boost press interest in your project.

The LEED rating system offers four certification levels for new construction -- Certified, Silver, Gold and Platinum -- that correspond to the number of credits accrued in five green design categories: sustainable sites, water efficiency, energy and atmosphere, materials and resources and indoor environmental quality. LEED standards cover new commercial construction and major renovation projects, interiors projects and existing building operations. Standards are under development to cover commercial "core & shell" construction, new home construction and neighborhood developments.

How does one achieve LEED certification?

The U.S. Green Building Council's LEED website provides tools for building professionals, including:

- Information on the LEED certification process.
- LEED documents, such as checklists and reference guides. Standards are now available or in development for the following project types:
    - New commercial construction and major renovation projects (LEED-NC)
    - Existing building operations (LEED-EB)

  - Commercial interiors projects (LEED-CI)
  - Core and shell projects (LEED-CS)
  - Homes (LEED-H)
  - Neighborhood Development (LEED-ND)
- A list of LEED-certified projects
- A directory of LEED-accredited professionals
- Information on LEED training workshops
- A calendar of green building industry conferences

Tips for Getting LEED Certified

- **Set a clear environmental target.** Before you begin the design phase of your project, decide what level of LEED certification you are aiming for and settle on a firm overall budget. Also consider including an optional higher certification target -- a "stretch" goal -- to stimulate creativity.

- **Set a clear and adequate budget.** Higher levels of LEED certification, such as Platinum, do require additional expenditure and should be budgeted for accordingly

- **Stick to your budget *and* your LEED goal.** Throughout out the design and building process, be sure your entire project team is focused on meeting your LEED goal on budget. Maintain the environmental and economic integrity of your project at every turn.

- **Engineer for Life Cycle Value** As you value-engineer your project, be sure to examine green investments in terms of how they will affect expenses over the entire life of the building. Before you decide to cut a line item, look first at its relationship to other features to see if keeping it will help you achieve money-saving synergies, as well as LEED credits. Many energy-saving features allow for the resizing or elimination of other equipment, or reduce total capital costs by paying for themselves immediately or within a few months of operation. Prior to beginning, set your goals for "life cycle" value-engineering rather than "first cost" value-engineering.

US commodity brokers expect the energy efficiency certificate or 'white tag' market to grow dramatically in the next few years as more states begin to treat efficiency as a tradable commodity. *Elisa Wood* investigates

The power of savings

★ Energy efficiency advocates are fond of saying that the cheapest megawatt is the one never used. But in the US, the true value of that saved megawatt is only now becoming clear, as an energy efficiency commodity market begins to take shape.

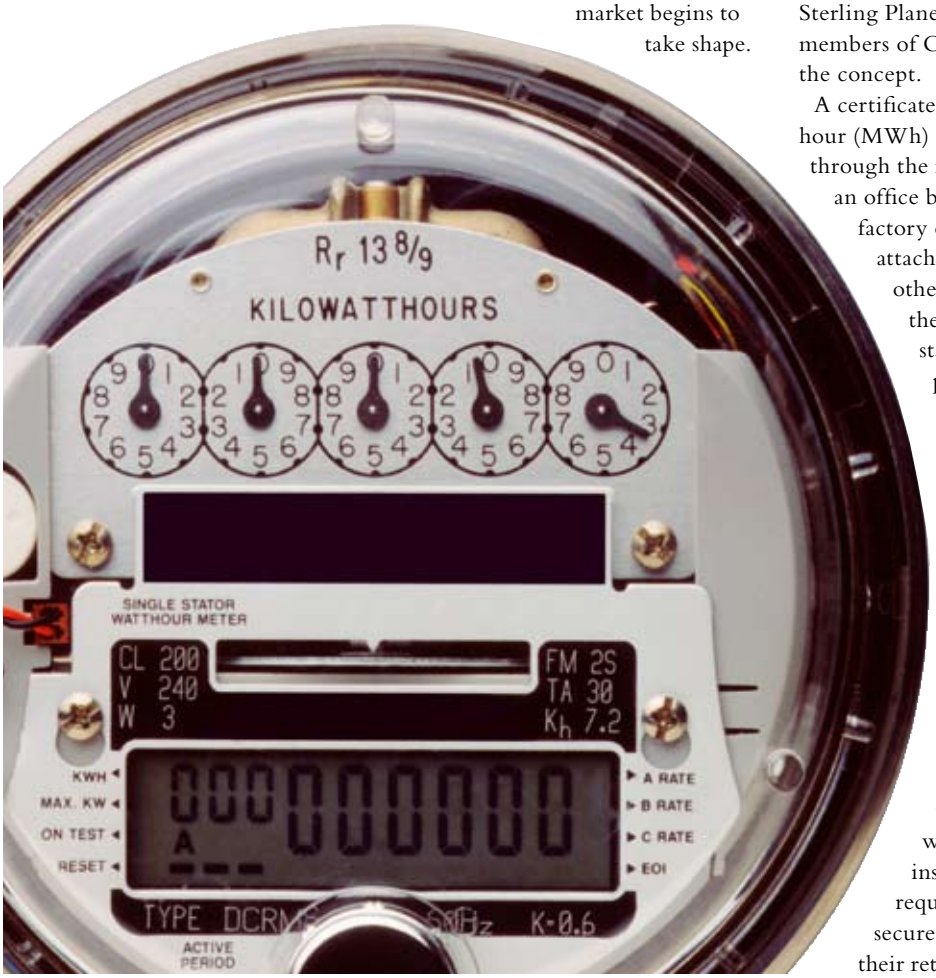

© istockphoto/Christine Balderas

Following the lead of the UK, France and Italy, three US states have set up rules that allow trading of energy efficiency certificates or 'white tags', as they have been dubbed by Georgia-based energy efficiency marketer Sterling Planet. Several other states and members of Congress are contemplating the concept.

A certificate represents one megawatt-hour (MWh) of electricity saved – perhaps through the installation of efficient lights in an office building, advanced motors at a factory or fuel-saving cogeneration units attached to a university. Utilities and other retail electricity sellers buy the certificates to comply with a state-mandated energy efficiency portfolio standard (EEPS), an enforcable energy savings requirement.

Craig Lilly, an attorney who handles clean energy deals from the California Silicon Valley office of Squire, Sanders & Dempsey, describes the rules as a kind of "financial engineering to establish an energy efficiency market". And so far the engineering seems to be working in Connecticut, the first state to push forward with the approach. Connecticut instituted an EEPS in 2007 that requires utilities and retail sellers to secure certificates equivalent to 1% of their retail electricity sales.

Efficiency certificates are commanding a healthy price in Connecticut, nearing the $31/MWh price cap set by state officials. "Demand is outstripping supply," says Paul MacGregor, a vice-president for California-based Nexant, an energy software and consulting company. MacGregor facilitates trades for various clean energy commodities.

Demand for certificates is expected to continue to grow in Connecticut, since the state's EEPS requirement rises by 1% annually until it tops off at 4% in 2010, which amounts to between 1.3 and 1.4 million MWh of energy reduction, MacGregor says. The annual requirements were set by state lawmakers as part of a larger calculation that considered how much clean energy – including both renewables and efficiency – the state can achieve.

Pat McDonnell, director of conservation and load management at United Illuminating (UI), a Connecticut utility, says he expects trading to "really pick up heat" in the next 12 to 18 months, as the requirement ramps up and more companies begin to create certificates in response.

Easier than building wind farms

The white certificate concept is modelled after the more mature US renewable energy credit or 'green tag' market, now underway in around half the US states. Those states require that a percentage of power sold to customers comes from green energy. Efficiency advocates say the fledging US white certificate market is likely to eventually see more trades than the green tag market simply because efficiency is so much easier to install. Wind farms, the largest generators of green tags in the US, require a large capital investment and extensive government review. Energy efficiency installations, on the other hand, are typically cheaper and require little regulatory scrutiny.

Efficiency also appears to offer a larger potential pool of clean megawatts. The Alliance to Save Energy (ASE), a Washington, DC advocacy group, says that the US already has saved 49 quads[1] of energy since 1973 through efficiency measures. In comparison, clean energy sources – in particular wind power, solar energy and geothermal energy – comprised only 0.7 quads over the same time period. Worldwide, efficiency could cut the growth in energy demand by half over the next 15 years, says the ASE.

But convincing businesses to pursue efficiency is not always easy. Companies like Nexant and Sterling Planet are hard at work trying to get the message out that efficiency not only reduces a company's monthly power bill, but also creates a revenue stream through certificate sales.

"At first they are skeptical about the whole idea," MacGregor says. "Then when you give them a nice cheque, they want to find more efficiency. Before they might not have undertaken projects with a four- or five-year payback – but with the energy efficiency certificate prices added, those projects become doable".

Nexant works to make the process less intimidating for the client by taking a percentage of the energy efficiency certificates created by the client's installation as its payment. As a result, Nexant does not get paid until the client is paid.

While energy efficiency certificates may be relatively easy to create, it is not always simple to prove their worth. Before certificates can be traded, the relevant state must verify that the applicants truly saved as much energy as they claim. Connecticut has a technical manual, a kind of 'cookbook' that spells out energy savings of many standard installations, says MacGregor. Complex or unusual efficiency projects can require a more lengthy review. He expects reviews to move more quickly as regulators become familiar with the various approaches to efficiency.

"At first they are skeptical about the whole idea. Then when you give them a nice cheque, they want to find more efficiency"

Paul MacGregor, Nexant

Certificate buyers are often utilities that are trying to secure their required quota. However, the certificate commodity trader does not deal directly with the utility, but instead transacts with a wholesale power

1. A quad is a unit of energy equal to 1015 (a quadrillion) British thermal units, or 1.055 × 1018 joules (1.055 exajoules or EJ) in SI units.

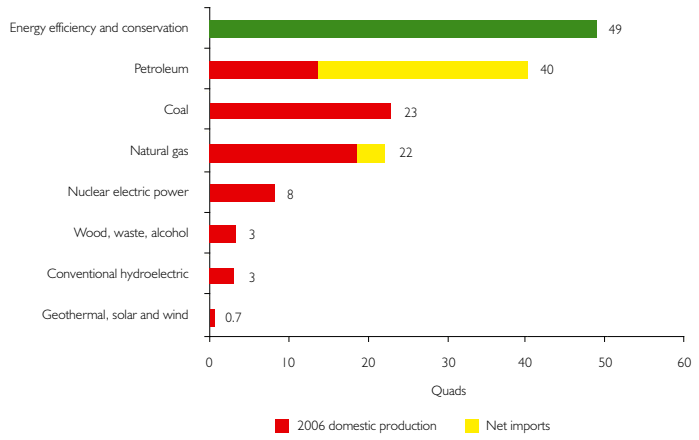

F1. America's greatest energy resource
Energy efficiency and conservation improvements since 1973 have reduced annual energy consumption by 49 quads *Source: Alliance to Save Energy (November 2007)*

"At some point, if white tags reach a national mass it is likely the federal government will try to step in and establish uniformity"

Craig Lilly, Squire, Sanders & Dempsey

marketer. This is because under liberalisation rules, Connecticut utilities must buy most of their power from marketers. Therefore, the utilities often ask marketers to bundle the certificates into a larger power supply deal.

Mixing markets

The certificates are expected to help states reach ambitious goals, often set by state governors, to increase energy efficiency. But it is not only the certificate market that is encouraging more efficiency in states like Connecticut. Other drivers include more favourable treatment of efficiency when participating in regional power pool transactions and concerns about carbon dioxide emissions. For example, Connecticut is part of ISO[2] New England, a six-state regional grid manager that recently took the pioneering step of letting companies bid their efficiency savings alongside power generation in a forward capacity market auction. The ISO ended up selecting efficiency programmes that will allow the region to avoid construction of about 1,188MW of power generation. A large number of projects are in Connecticut.

In addition, Connecticut is part of the multi-state Regional Greenhouse Gas Initiative (RGGI), which is expected to institute the nation's first cap-and-trade market for carbon emissions next year. "There is no cleaner kilowatt than the one you don't use," says UI's McDonnell. In that spirit, the RGGI is expected to encourage the installation of efficiency projects as a way to reduce carbon dioxide emissions.

Policymakers are still working out rules governing the interplay of the various incentive programmes – certificates, the forward capacity market and the RGGI – and some controversies are cropping up. Consumer advocates warn that efficiency projects should not be allowed to receive more than one of the subsidies, arguing that double-dipping creates a financial windfall for the business undertaking the efficiency measure.

Disputes also sometimes arise about who should receive financial credit for an efficiency installation. In Connecticut, the rules are clear. The company that installs the efficiency measure retains the certificate unless it did so while enrolled in a utility-financed conservation and load management programme. Then the certificate goes to the utility. Utilities can sell the certificates into the marketplace, but cannot retain the profits. Instead, the money must be placed in a state fund that provides grants for clean energy projects.

In other states, the rules about who owns credits are still being worked out. Wal-Mart, which bills itself as the world's largest retail store chain, last year became embroiled in a dispute with utilities in the state of New Hampshire about who should retain credit for a demand-response initiative undertaken by one of its stores. The utilities argued that they should own the credits if a customer received a utility subsidy for the efficiency measure. Since the subsidy achieved its goal of encouraging the customer to pursue efficiency, it is unnecessary to give the customer an additional incentive, like a forward capacity market payment. Instead, the utilities said

2. *Independent System Operator*

legal rights to the credit should go back to the utility, which rolls the money into more subsidies for other customers.

Wal-Mart countered by drawing an analogy between electricity and soybeans. Soybean farmers receive subsidies from the government to grow their crop. After the farmer sells the crop, the government does not take the profits made by the farm and roll them back into subsidies for others. But ultimately, New Hampshire regulators sided with the utilities. The credit should go to the utility, they said, concluding that putting the money back into an energy efficiency subsidy pool was the best use of the funds.

Exactly how much the white certificate market will grow remains uncertain. While it is possible to calculate growth to some degree based on state requirements, there is a wild card: the voluntary market. More and more businesses like Google and Wal-Mart have announced self-imposed efficiency or carbon reduction targets. These companies pursue clean energy goals not because government requires them to do so, but because they want to engage in an act of corporate goodwill.

"We have had conversations with some folks about voluntary markets. There may be people out there who want to buy these for carbon offsets," says UI's McDonnell.

Poised to go national?

US information technology companies are taking a particularly hard look at reducing their energy usage on a voluntary basis. Cost is driving the decision, especially at data centres that face high cooling bills because of the intensive heat generated by computers. For every dollar spent on computer hardware, 50 cents is spent on energy, says market research company IDC. Over the next four years, energy spending is expected to leap to 71 cents for every dollar spent on hardware.

The energy efficiency certificate market appeared poised for a huge leap last year, when the US Congress debated creating a national efficiency requirement, along with a national renewable energy portfolio standard. The standard could have led to a national certificate trading market. Both measures failed, amid concern that some states could not reach the targets. However, efficiency advocates expect Congress to reconsider the issue and believe it may garner more support after the Presidential election in November.

"There is no cleaner kilowatt than the one you don't use"

Pat McDonnell, United Illuminating

In any case, various states continue to lead the charge to proliferate the white certificate trading concept. In addition to Connecticut, Pennsylvania has set a target of 10% efficiency by 2010, and Nevada will aim for a 5% target by 2015. California, Hawaii, New York, New Jersey, Oregon, Colorado, Washington, Illinois, Minnesota, Texas, Florida, Vermont, North Carolina and Virginia are among the states in various stages of instituting similar strategies.

"At some point, if white certificates reach a national mass it is likely the federal government will try to step in and establish uniformity," Lilly says. "There is more and more interest among companies in going green and having some sort of energy efficiency plan. I think you could see a system or framework developing that everyone could agree on."

It remains to be seen how soon such agreement will occur or even if certificate trading will ever reach national scope. But given the high price of electricity, growing demand and a general sentiment that green is good, energy efficiency trading seems to be a concept whose time has come in the US. ER

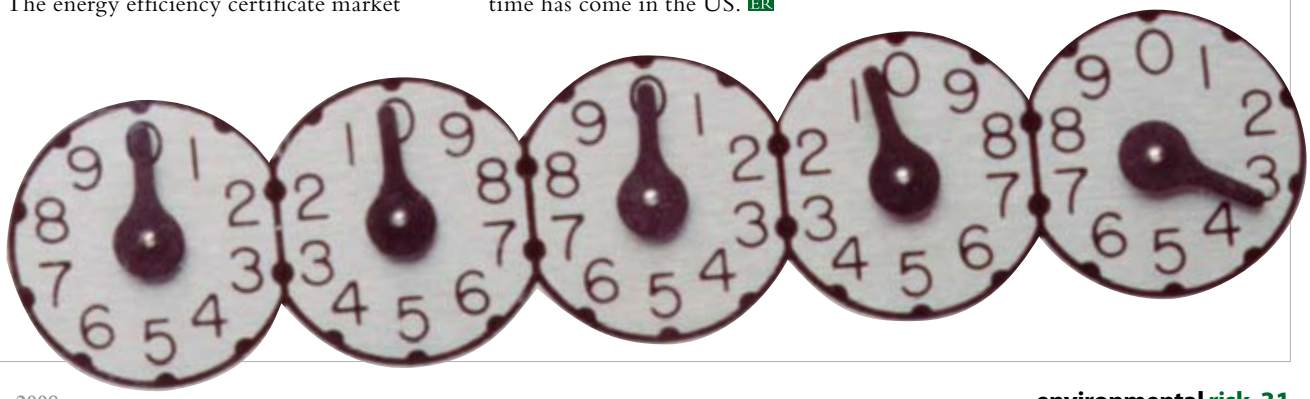

A Thermosyphon Run Around Heat Pipe Can Solve Mold Causing Problems

By: Richard W. Trent, Member ASHRAE

Background

A commercial air conditioning system, since its earliest creation by Doctor Carrier, has been capable of both cooling air as well as lowering its water content. The cooling ability of an air conditioning system is well understood. The fact that the air conditioning process often results in moisture removal as well as temperature reduction is not so well understood. This is particularly true for both the public and the regulatory officials that define equipment performance. This lack of understanding has resulted in serious health problems that are only now showing up in the news media, litigation and more recently insurance companies that are either limiting or eliminating their coverage resulting from mold damage.

Relationship of Relative Humidity and Mold Growth

While there are many factors that can cause a sick or unhealthy building, when the relative humidity (amount of moisture in the air) is maintained in the range of 40 –60 % health related problems are minimized. This is illustrated in figure 1 that shows the ever-increasing human health effect due to fungi (mold), bacteria and viruses as relative humidity increases beyond the Optimum Zone.

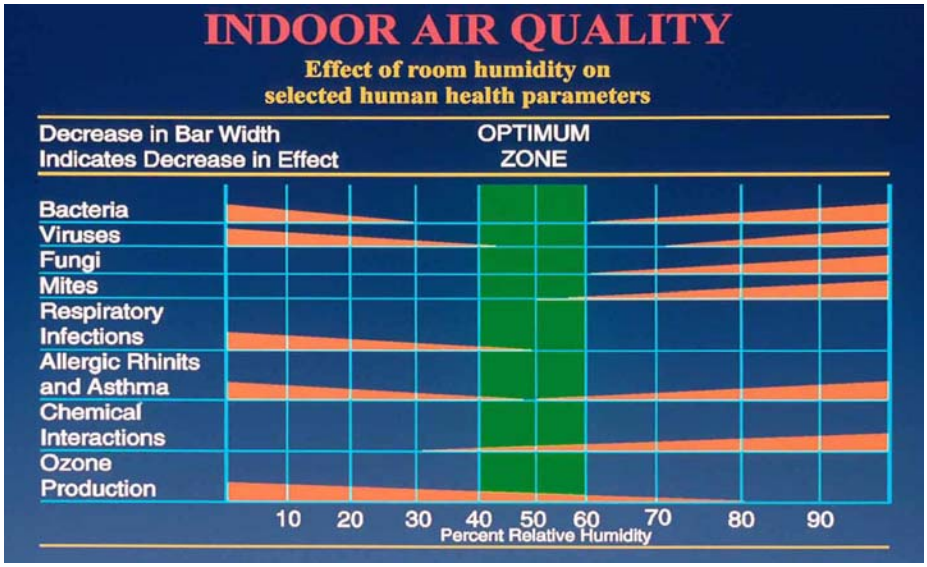

Figure 1. Optimum relative humidity range for minimizing adverse health effects (adapted from "Indirect Health Effects of Relative Humidity in Indoor Environments" by Arundel, Sterling, Biggin, and Sterling)

Many of our mold and mildew problems can be traced back to the energy crisis of the 1970's. Our buildings were made tighter to save energy. Sun load was reduced with better insulation and energy saving windows. More energy efficient lighting that caused less sensible heat load was

installed. New codes were developed. One such code defined Seasonal Energy Efficiency Ratio (SEER) as the amount of Cooling BTUH generated divided by the watts of Energy consumed to generate that cooling BTUH. The higher the ratio, the better the equipment energy performance.

Moisture Load In Air

It takes 21,600 BTUH to cool 1000 CFM of air at 95/50% RH to 75/95% RH
(1.08x CFM x delta T)

It takes 65,621 BTUH to cool 1000 CFM of air at 75/95% RH to 55/95% RH.

Of this 43,180 BTUH is Latent Load (.68 x CFM x delta g)

Lowering Humidity is twice as hard as Cooling!

Figure 2. Calculating energy required removing Latent and Sensible loads

In figure 2 above we note that no moisture is removed cooling 1000 CFM of air from 95 to 75 degrees Fahrenheit. This is because we have not reached the dew point. We call this process sensible heat removal. By continuing to cool this same 1000 CFM from 75 to 55 degrees Fahrenheit the same air we started with can no longer hold the same amount of moisture we started with. Once we reach the saturation point excess moisture must drop out of the air as we proceed down the saturation curve to a lower temperature. In the Figure 2 example we note that it takes three times as much energy to lower the air temperature from 75 to 55 degrees Fahrenheit. This is because we are removing both latent and sensible heat from the air. Total Heat formula applies (4.5 x CFM x delta h), of this 65,621 BTUH Total Heat, 43,180 BTUH is Latent Load.

In a later paragraph below “Performance of Thermosyphon Run Around Heat Pipe” there are psychrometric examples A and B to show the results of treating 100% outside air at both full load and part load. The thermosyphon does not create energy. It merely moves heat (energy) from the entering air or return air of an air conditioning unit to the supply air leaving an air conditioning system. No new energy is required. No new air conditioning load is created. The process transfers heat (energy) using a change of state process that has no moving parts. The Thermosyphon Run Around Heat Pipe Heat Exchanger Loop is a separate refrigeration process that has no moving parts. This heat transfer process has been applied with great success by the engineers in the electronic industry as well as petroleum industry engineers concerned with protecting the frozen tundra while transporting hot oil through the Alaskan Pipeline.

Since it requires two (2) times as much energy to condense moisture from air as it does to lower temperature (see calculations and explanation above), the performance relationship of many air conditioners and heat pumps being manufactured were changed. The cooling ability (Sensible Capacity) was increased and the moisture removal ability (Latent Capacity) reduced to achieve a higher SEER rating. Unfortunately, reducing the latent capability of air conditioners further

magnified the effect of building envelope load changes due to the better insulation, energy saving lighting and windows and tighter construction. The improved envelope had indeed reduced the sensible load but not the latent load at the very time the air conditioning and heat pump manufacturers were reducing the latent capacity of the equipment to achieve higher SEER ratings. The net result is many fine energy efficient air conditioning systems are less able to remove moisture than the old inefficient equipment they replaced. Today we have owner-clients complaining about feeling cool and clammy. They also are concerned about mold and mildew; and want their high humidity problem corrected.

Moisture Load

Moisture load is caused by such things as: bathing & showering, cleaning of windows, mopping of floors, humid outside air, drying clothing, fish tanks, cooking, plants, people breathing, any process that promotes the evaporation of water.

To maintain a healthy building indoor environment the humidity level must be maintained in the optimum zone of 40-60% Relative Humidity. This can be done in an energy efficient manner by incorporating a Thermosyphon Run Around Heat Pipe Heat Exchanger like the one described in this article into the air handler portion of an air conditioning system. This technique changes the performance heat ratio between temperature reduction and moisture removal without changing the total capacity of the system. The result is a more forgiving air conditioning system that is now better able to overcome moisture loads including infiltration as well as the high latent load often associated with part load conditions.

A Thermosyphon Run Around Heat Pipe Heat Exchanger is a Non-Energy Consuming Way to Lower Supply Air Relative Humidity.

What if an air conditioning system can be made multifunctional by providing peak cooling when needed and more dehumidification at part load when more latent cooling is needed? Wouldn't that be the best of all worlds? At least from an air conditioning point of view? By properly incorporating a Thermosyphon Run Around Heat Pipe Heat Exchanger into an air conditioning system that treats return air or 100% outside air or a mix of return and outside air, that is exactly what is achieved.

During the past several years the author of this article has provided a series of humidity control solutions and energy recovery solutions for use in Heating, Ventilation and Air Conditioning (HVAC) Systems. These solutions have been successfully applied to several high profile installations, including the White House Visitor Center in Washington, D.C. In these cases the building owner was interested in providing a simple, reliable, energy efficient long-term solution to a requirement for a healthy indoor air environment.

Many of these solutions have utilized a Thermosyphon Run Around Heat Pipe Heat Exchanger to transfer heat from the entering air or return air of an air conditioning unit to the supply air leaving an air conditioning system. Please note that by transferring energy from the incoming air stream into needed air reheat energy we replace other forms of reheat energy commonly used to attain the lower relative humidity needed for a healthy indoor environment. This improves the EER (Energy Efficiency Ratio) of the overall air conditioning system because we achieve the

desired temperature and relative humidity with less input energy. Besides the electrical power to operate the compressor and blower assembly, the input energy for an air conditioning system must also include reheat energy to achieve the required dehumidification.

Traditional reheat energy sources include:

- The electrical energy required to operate strip heat at room air terminals.
- Boiler generated hot water to reheat the supply air leaving the cooling coil or evaporator coil.
- Waste heat from the compressor condenser in the form of Hot Gas.
- Waste heat from the building exhaust.

In applying all of the above sources of reheat, the cooling load of the air conditioning system has been increased. In some of these reheat methods; the input energy needed to operate the air conditioning system has also been increased.

Such is not the case when a Thermosyphon Run Around Heat Pipe System (TRAHP) is incorporated in an air conditioning system. This is because the return or entering air becomes pre-cooled by the TRAHP so the air entering the direct expansion coil or chilled water-cooling coil is at a lower temperature. This lower air temperature enables the direct expansion coil or chilled water-cooling coil to remove more moisture from the air being conditioned. At the air enters the reheat portion of the TRAHP it contains less moisture. As this same air passes through the reheat portion of the TRAHP it is heated by the same amount of energy used to preheat the entering air. This results in an air conditioning system with increase Latent capacity and supply air at a lower relative humidity, all of which is attained without adding heat load or external energy.

While there are many different forms of heat pipe heat exchangers, most have been developed to optimally meet a particular application. All employ the same basic principle. In its simplest form a heat pipe is a sealed tube that has been evacuated, charged with a precise amount of refrigerant and sealed. The actual function of a heat pipe is described in the figure below.

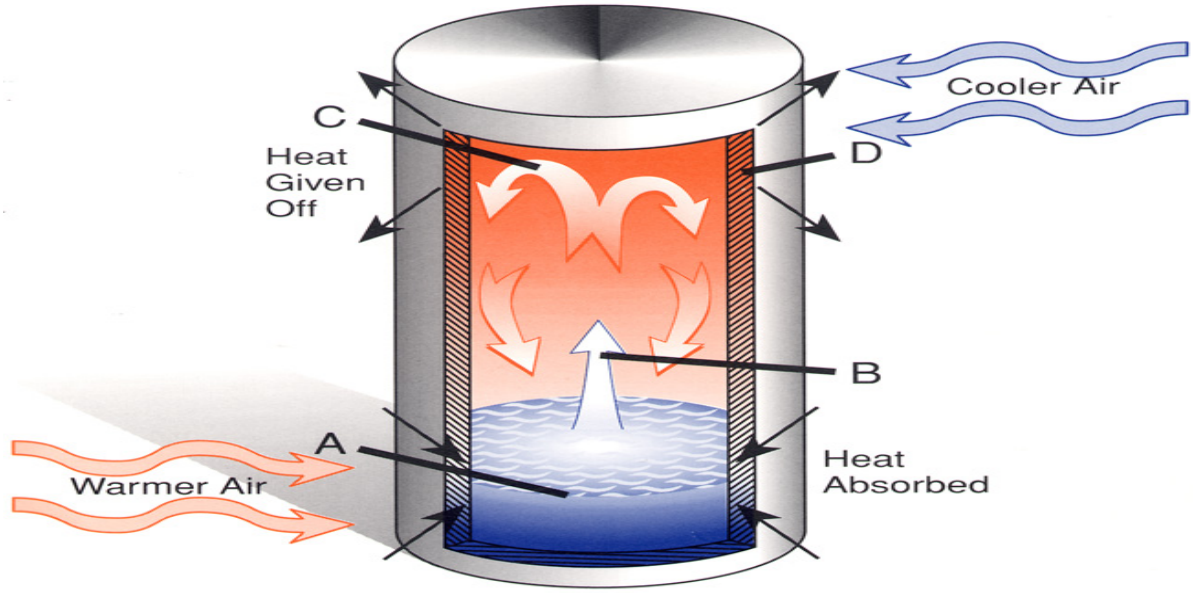

Figure 3. Basic Heat Pipe Operation

The refrigerant (A) absorbs heat from a heat source. In the above figure, the heat source is the warm air shown passing over it. The refrigerant changes state and rises as vapor (B). At point (C) the vapor gives its heat to a heat sink, the cool air, where it condenses back to a liquid (D). The condensed refrigerant is returned by gravity to complete the process. This vaporizing and condensing process continues as long as there is a temperature differential between the two ends of the heat pipe.

Shown below is a schematic of how a heat pipe is used in an air conditioning system to passively reduce the energy requirement while providing free reheat for dehumidification.

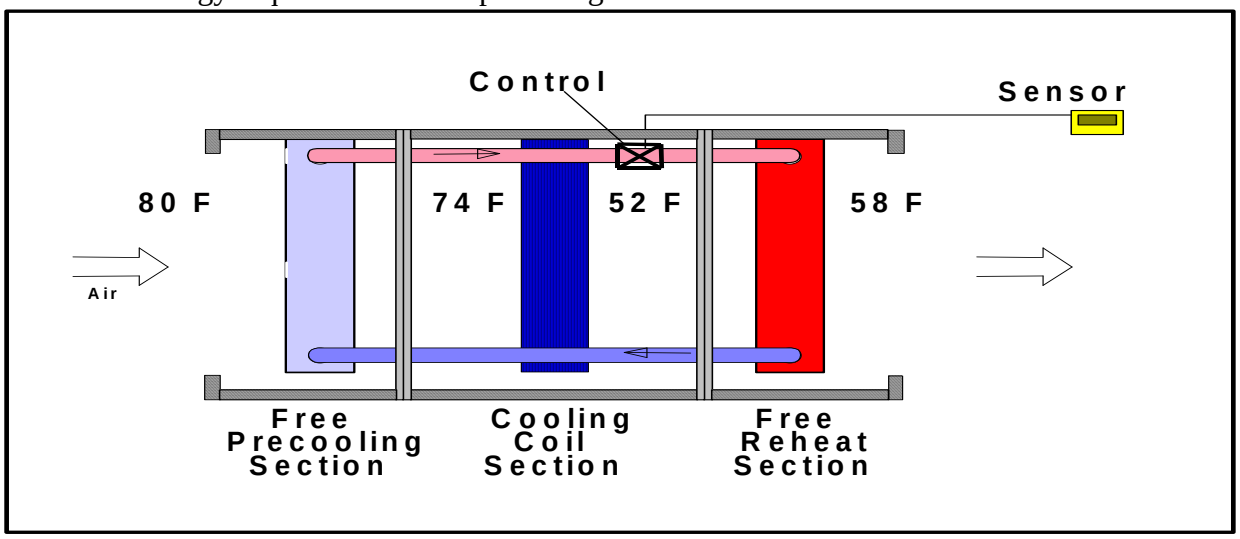

Figure 4. Diagram of Basic Thermosyphon Run Around Heat Pipe

Performance of a Thermosyphon Run Around Heat Pipe

The performance of an air conditioning system when fitted with a Thermosyphon Run Around Heat Pipe can be best demonstrated with a Psychrometric Chart.

In the example A below full design load 1000 CFM of 100% outside air (95db/78wb) is processed into supply air (69.5db/ 57.2Rh).

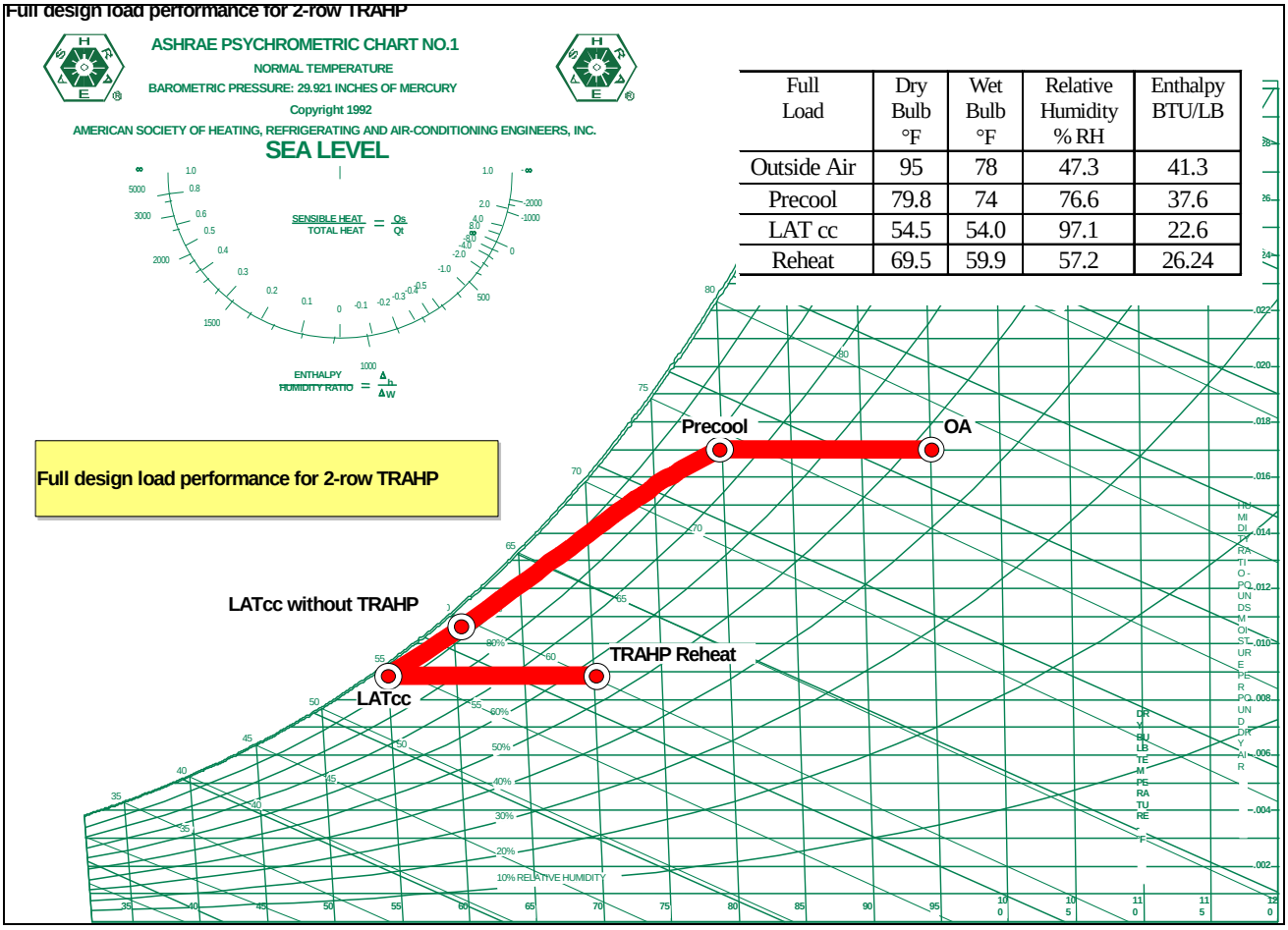

Full Load	Dry Bulb °F	Wet Bulb °F	Relative Humidity % RH	Enthalpy BTU/LB
Outside Air	95	78	47.3	41.3
Precool	79.8	74	76.6	37.6
LAT cc	54.5	54.0	97.1	22.6
Reheat	69.5	59.9	57.2	26.24

In the example B below part load 1000 CFM of 100% outside air (75db/90%Rh) is processed into supply air (57.6db/69.5Rh).

Part load performance for 2-row TRAHP

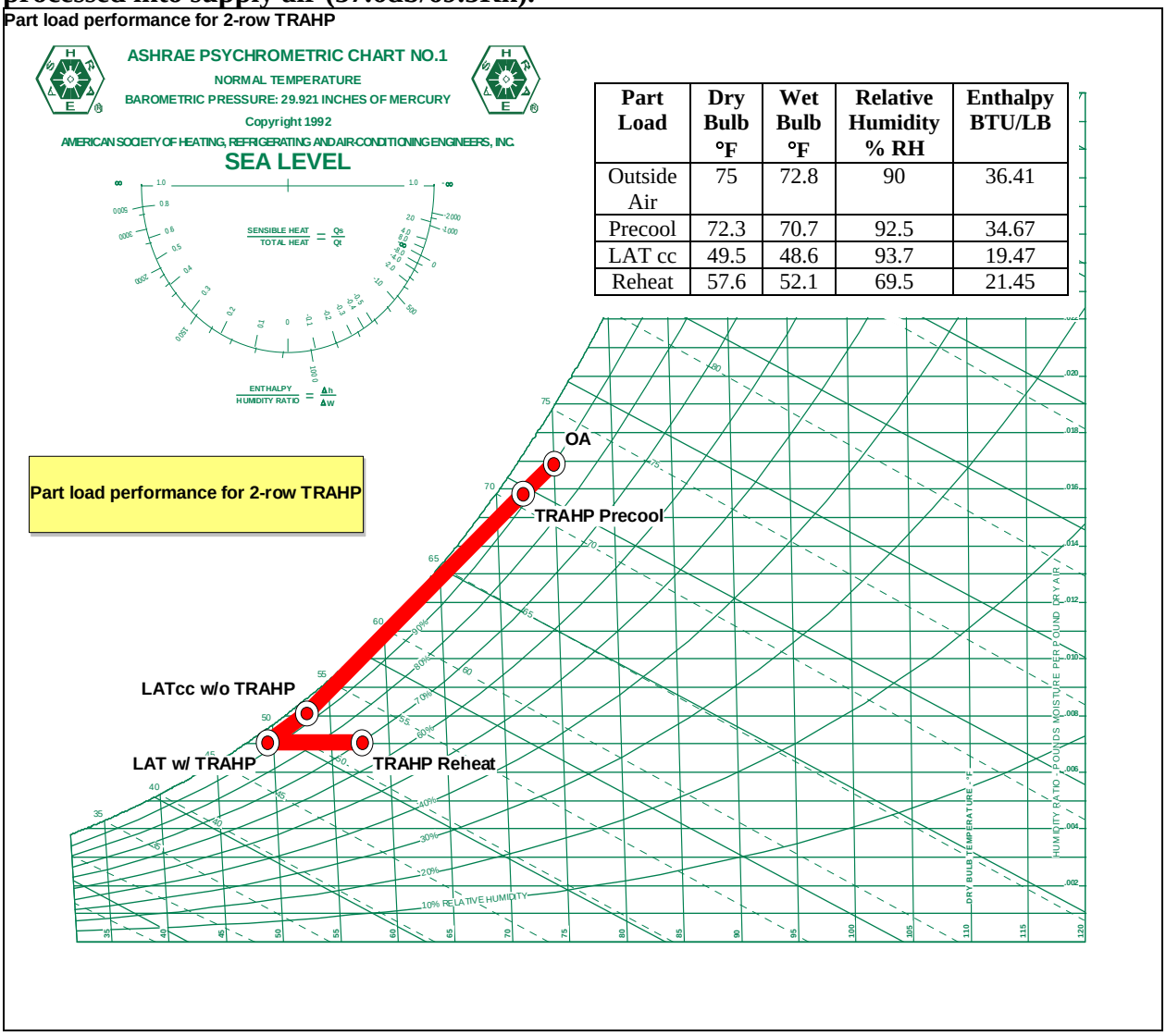

Part Load	Dry Bulb °F	Wet Bulb °F	Relative Humidity % RH	Enthalpy BTU/LB
Outside Air	75	72.8	90	36.41
Precool	72.3	70.7	92.5	34.67
LAT cc	49.5	48.6	93.7	19.47
Reheat	57.6	52.1	69.5	21.45

Please note that the Thermosyphon Run Around Heat Pipe in both examples A or B is removing BTUH from the outside air. Instead of throwing it away as exhaust, this heat energy is being put to use as Free Reheat. Free Reheat is defined as not requiring external additional energy or adding to the building load from some form of waste heat such as condenser hot gas reheat.

Also in the full load example A (above) the Thermosyphon Run Around Heat Pipe (TRAHP) effectively reduces the moisture content of the supply air by 20% because the outside air has been pre-cooled. Moisture content is reduced from 76.5 to 61.3 grains per pound.

In the part load example B (above) the Thermosyphon Run Around Heat Pipe (TRAHP) effectively reduces the moisture content of the supply air by 13% because the outside air has been pre-cooled. Moisture content is reduced from 56.4 to 49 grains per pound.

Other Benefits From Controlling Relative Humidity

This reduction in humidity level has an additional benefit when we consider the comfort factor. By lowering the relative humidity people occupying an indoor air environment are comfortable at a higher room temperature. We see this relationship of humidity and temperature in the comfort chart shown below. From this chart we can see that 76F at 90% RH feels like 82F. However 76F at 50% RH feels like a comfortable 70F.

TEMPERATURE FAHRENHEIT	RELATIVE HUMIDITY										
		10%	20%	30%	40%	50%	60%	70%	80%	90%	100%
	76°		60°	63°	67°	70°	73°	76°	79°	82°	85°
	78°		63°	67°	70°	74°	76°	78°	82°	85°	89°
	80°	62°	66°	70°	73°	77°	80°	82°	88°	90°	93°
	82°	63°	68°	72°	76°	80°	82°	88°	90°	93°	97°
	84°	66°	71°	76°	79°	83°	86°	90°	94°	98°	103°
	86°	68°	73°	78°	82°	86°	90°	94°	98°	103°	
	88°	70°	76°	81°	85°	89°	93°	98°	102°	108°	
	90°	73°	78°	84°	88°	93°	97°	102°	108°		
	92°	75°	82°	87°	91°	96°	101°	108°	112°		
	94°	77°	84°	90°	95°	100°	107°	111°			
	96°	79°	87°	93°	98°	103°	110°	118°			
	98°	82°	90°	98°	101°	107°	114°				
	100°	85°	92°	99°	105°	111°	118°				
	102°	87°	95°	102°	108°	115°	123°				
	104°	90°	98°	106°	112°	120°					

Figure 5. Comfort Chart

Energy Savings

The energy saving from maintaining comfort at a higher temperature is readily apparent from the following graphic developed by the South Carolina Electric and Gas Company.

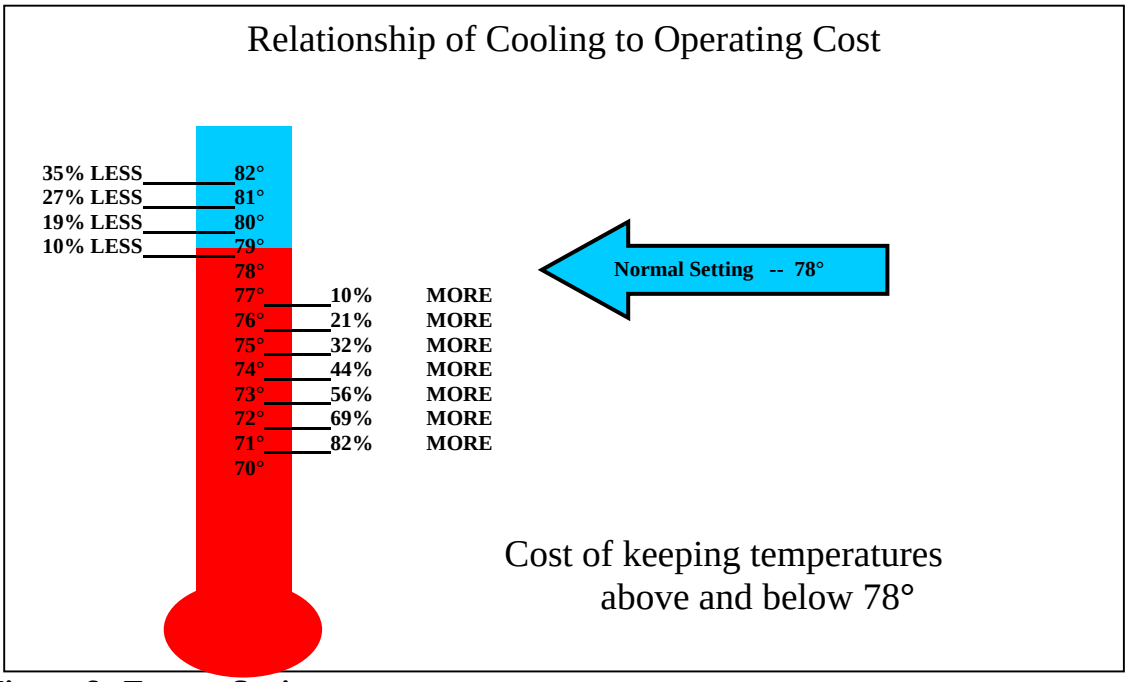

Figure 6. Energy Savings

Summary:

There are many High SEER rated units on the market today. At ARI standard conditions they consume less energy per BTU of cooling than their less efficient predecessors. However their specific heat ratio (amount of sensible cooling/ total cooling) is often much higher than the older less efficient models they replaced. This results in the cooling load (thermostat setting) being satisfied before the moisture (latent) load is satisfied.

Modern buildings today employ energy saving techniques to reduce sensible load such as better insulation and more efficient lighting so that the moisture (latent) load has now become a larger portion of the total cooling load. This is particularly true at part load conditions.

One very attractive corrective action is to incorporate a Thermosyphon Run Around Heat Pipe into the air conditioning system to convert some of the sensible (temperature reduction) capacity into latent (moisture reduction) capacity. Please note this process does not reduce the total capacity of the air conditioning system. Instead, it reduces the sensible heat to total heat ratio while providing free reheat to lower the relative humidity of the supply air leaving the evaporator or cooling coil. All without the use of external or waste heat energy. The thermosyphon, when properly placed in the air stream, removes some sensible load from the air entering the cooling coil. It then transfers that sensible heat energy to the supply air. This transferred precooling energy is re-applied as reheat to lower the relative humidity of the supply air leaving the cooling coil. The effect of Relative Humidity room conditions on selected human health parameters is reflected in figure 1 above. It defines the Optimum Zone as 40-60 % Relative Humidity. This

chart (adopted from ASHRAE Chapter 20) shows that mold growth increases proportionately as the Relative Humidity is increased above the Optimum Zone.
Use of the Thermosyphon Run Around Heat Pipe, as described above, is an energy efficient way of satisfying the need to avoid Mold causing problems. When integrated into an air conditioning system, that air conditioning system becomes much more forgiving and better able to cope with the higher proportion of latent load found in modern buildings.

The importance of lowering the relative humidity entering the duct to 70% is cited in Para 5.11 of ASHRAE standard 62-2001 "Ventilation for Acceptable Indoor Air Quality". "If the relative humidity in occupied spaces and low velocity ducts and plenums exceeds 70%, fungal contamination (for example, mold, mildew, etc) can occur."

References:

- ANSI/ASHRAE Standard 62-2001: paragraphs 5.10 and 5.11
- Arundel, A.V., et al, "Indirect Health Effects of Relative Humidity in Indoor Environments", Environmental Health Perspectives, Vol. 65, pp 351-361, 1986
- Mr. Somchai Paarporn, P.E., ASHRAE Journal, June 1999; pages 32-38- Runaround Loop Heat Recovery with Dehumidification System
- Heat Pipes, Your Answer to Cooling and Humidity Problems, Edison Electric Institute, Washington, D.C. (07-26-91)
- Beckwith, W.R., B.S., CIAQ, Technical paper," Advanced Technology for Economical Dehumidification to Improve Indoor Air Quality", Proceedings from IAQ Conference and Expo, Tampa, Florida, April 29-May 2 1992
- Mr. Donald P. Gatley, PE "Dehumidification Enhancements for 100-Percent Outside-Air AHU's, Simplifying the decision-making process", HPAC- Heating/Piping/Air Conditioning Engineering, September 2000.

About the Author:

Richard W. Trent is President of Carolina Heat Pipe Inc., Charleston, S.C. He is a voting member of ASHRAE TC 7.5- Mechanical Dehumidification and Heat Pipes as well as the Vice Chair of ASHRAE Special Project Committee that prepared the recently issued ANSI/ASHRAE Standard 151-2002- Practices for Measuring, Testing, Adjusting and Balancing of Shipboard HVAC&R systems. He is also the Vice Chair for Membership Promotion in Region IV and is Past President of the Charleston ASHRAE Chapter.

CURING SICK BUILDINGS

You can become sick from the ways buildings are constructed and maintained. Buildings can foster mold, viruses and bacteria and they are often labeled "sick buildings". Five items need to be emphasized in the design, development and construction of buildings:

1. Prevent moisture from entering the building.
2. Control the humidity level in the building and in air conditioning ducts.
3. Avoid hazardous construction materials.
4. Control the sources of material that promote mold, virus and bacteria growth.
5. Recommend maintenance procedures for building owners and managers.

For their own good, every owner and tenant needs to be cooperative with architects and design engineers to ensure that these five elements are followed.

Moisture Cause

Moisture is the number one breeding ground for mold, viruses and bacteria.

In a colder climate, you want to keep the heat and moisture inside the building during the winter. To do this, you insulate the building and put a moisture barrier on the inside of the building.

In a warmer climate, you want to keep the hot and humid air outside of the building. You need a moisture barrier at or near the outside of the building. The exterior moisture barrier should reduce the operating cost of the building and provide a healthier environment in the building.

You should avoid a ventilated attic and ventilated crawl space or put a vapor barrier in the attic or crawl space. A brick or porous wall needs an air space, a vapor barrier and a method to drain any moisture. Synthetic stucco needs a moisture barrier on the exterior surface or an air space and a vapor barrier.

Humidity Level

To control the humidity level in a building, the mechanical design team needs to know what you expect.

A 40 to 60% humidity level is considered optimum. At this humidity level, the growth of mold, bacteria and viruses are minimized.

For energy efficiency, use a controllable wrap-around thermosyphon heat pipe exchanger to reduce the duct humidity to 70% and allow the air conditioning system to maintain a 40 to 60% humidity level in the building. This is a low operating cost method of controlling the humidity level.

The key requirement is to specify an air conditioning system that has excellent moisture removal at part-load applications (that is, applications that are lower than peak load).

If the engineer designs for peak load and ignores the part-load applications, then you may have an oversized system that may not work efficiently for moisture removal. For example, at a 50% part load most air conditioning systems will have very limited moisture removal ability.

It is necessary to have moisture removal at part-load applications. The controllable thermosyphon heat pipe will allow the air conditioning system to maintain a good level of moisture removal at part-load applications.

The engineer should require a positive pressure in the building during the hot and humid conditions and minimum ventilation during the other seasons. In locations where the winter design temperature is below 20º(F) and the latent load may not maintain 40% humidity, some moisture may need to be added.

Hazardous Materials

Hazardous materials should be obvious, but sometimes they are hard to anticipate. Just as there are side effects in the medical industry from treatments or drugs, there are the same types of problems with construction materials.

What are the side effects of the building materials that we use?

Examples of the hazardous materials to avoid are the lead in paint; the asbestos in floor tile, roofing felt and insulation material; the formaldehyde in particle board glue; the ketones in paint fumes; and flammable materials.

The off gassing of carpets and particleboard are two examples of components that can reduce the indoor air quality in a building. Additionally, any materials that are toxic, carcinogenic, or will cause an allergic reaction, a rash, or asthma should be avoided.

Carpet, textiles and other materials to optimize the esthetic impact of a building can, at times, provide a source of food for molds, viruses and bacteria.

When buildings are designed for the sick, the elderly, restaurants or schools, carpets and textiles should be limited, as they can be food for molds, viruses and bacteria.

Building Maintenance

A poorly maintained building will be dirty and have a source of food for mold, viruses and bacteria. The air conditioning system, without proper maintenance, may not be operating efficiently and it may not remove the moisture in a building and the humidity level may be excessive. The owners are responsible for maintaining the building and a clean healthy environment.

Moisture Codes

The code requirements for moisture resistant construction vary. This is an expanding and developing part of the construction industry.

The Southern Standard Building Code Congress does require an exterior vapor barrier. There is also a section in the Fundamental Handbook of the American Society of Heating, Refrigeration and Air Conditioning Engineers (ASHRAE) on the subject. ASHRAE discusses it in the Chapter on Thermal Insulation and Vapor Retarders in air conditioning buildings in humid climates.

ASHRAE does recommend a building relative humidity of 40 to 60% and a 70% duct relative humidity in ASHRAE Standard 62-2001.

The code requirements are usually considered to be the minimum construction standards. In an area of developing code requirements, exceeding the minimum code requirements is recommended.

While there are many factors that can cause a sick or unhealthy building, when relative humidity in the air is maintained in the range of 40-60% health factors such as Bacteria, Viruses, Fungi, Mites, Allergic Rhinitus, Asthma, Chemical Reactions are minimized or practically non-existent. Furthermore, when the relative humidity increases above 60% due to a humid atmosphere, these human health conditions become proportionally more dangerous to human health.

Existing Buildings

With existing buildings, the emphasis should be placed on the same key elements. Moisture barriers may need to be added, mechanical equipment should be modified to improve the moisture removal of capacity of the systems. The emphasis on inspection and the analysis of the building will be the design development phase of a project. Emphasis should be placed on improving the moisture removal of the mechanical system and improving the buildings' energy efficiency.

About the Author: Mr. Louis N. Drake III is well known in the Charleston-Columbia regions of South Carolina. He has been a practicing professional engineer in the air conditioning field since graduating from Georgia Tech. His professional career includes employment as a Naval Officer, Sales Engineer for an air conditioning equipment manufacturer and a Design Engineer at the Charleston Navy yard. He is a founding member of the Charleston Chapter of the American Society of Heating Refrigeration and Air Conditioning (ASHRAE). During the period 1980-1995 he was employed as a Staff Engineer and Project Manager at the Veterans Administration (VA) Medical Center, Charleston, S.C. Projects he managed included chiller replacements, air handler replacements, ice storage systems and ward renovations. Presently he is the Principal at Bay Balancing and Vice President of Engineering at Carolina Heat Pipe, Inc.

Environmental Health Perspectives
Vol. 65, pp. 351-361, 1986

Indirect Health Effects of Relative Humidity in Indoor Environments

by Anthony V. Arundel,* Elia M. Sterling,† Judith H. Biggin,† and Theodor D. Sterling*

A review of the health effects of relative humidity in indoor environments suggests that relative humidity can affect the incidence of respiratory infections and allergies. Experimental studies on airborne-transmitted infectious bacteria and viruses have shown that the survival or infectivity of these organisms is minimized by exposure to relative humidities between 40 and 70%. Nine epidemiological studies examined the relationship between the number of respiratory infections or absenteeism and the relative humidity of the office, residence, or school. The incidence of absenteeism or respiratory infections was found to be lower among people working or living in environments with mid-range versus low or high relative humidities. The indoor size of allergenic mite and fungal populations is directly dependent upon the relative humidity. Mite populations are minimized when the relative humidity is below 50% and reach a maximum size at 80% relative humidity. Most species of fungi cannot grow unless the relative humidity exceeds 60%. Relative humidity also affects the rate of offgassing of formaldehyde from indoor building materials, the rate of formation of acids and salts from sulfur and nitrogen dioxide, and the rate of formation of ozone. The influence of relative humidity on the abundance of allergens, pathogens, and noxious chemicals suggests that indoor relative humidity levels should be considered as a factor of indoor air quality. The majority of adverse health effects caused by relative humidity would be minimized by maintaining indoor levels between 40 and 60%. This would require humidification during winter in areas with cold winter climates. Humidification should preferably use evaporative or steam humidifiers, as cool mist humidifiers can disseminate aerosols contaminated with allergens.

Introduction

Over the last 15 years, the quality of air in indoor environments such as houses, apartments, and offices has been extensively investigated. Field studies have frequently found undesirably high levels of known respiratory irritants such as nitrogen and sulfur dioxides, hydrocarbons, and particulates (*1*) and known or suspected carcinogens such as asbestos, radon, some particulates, and formaldehyde (*2*). In many cases, high indoor levels of contaminants have been traced to indoor building materials, furnishings, appliances, and human activities. Indoor contaminant levels can also be exacerbated in tightly sealed energy conserving buildings with low fresh air ventilation rates. Either reducing the sources of pollutants or increasing ventilation rates, or both, can be used to reduce or eliminate the levels of these contaminants.

Water vapor, usually measured as relative humidity or the percentage of water vapor held by the air compared to the saturation level, is not usually considered to be an indoor contaminant or a cause of health problems. In fact, some level of humidity is necessary for comfort. On the other hand, the relative humidity of indoor environments (over the range of normal indoor temperatures of 19 to 27°C, has both direct and indirect effects on health and comfort. The direct effects are the result of the effect of relative humidity on physiological processes, whereas the indirect effects result from the impact of humidity on pathogenic organisms or chemicals.

This review is primarily concerned with the indirect health effects of relative humidity, which are more complex than the direct health effects and of greater public health significance. However, it is worthwhile to briefly discuss some of the direct health effects, as these effects often lead to solutions (such as humidification) which may in turn indirectly affect health.

Direct Health Effects

Both very low or high relative humidities may cause some physical discomfort, as the relative humidity of the air directly affects temperature perception (*3*). Extremely low (below 20%) relative humidities may also cause eye irritation (*4,5*) and moderate to high levels of humidity have been shown to reduce the severity of asthma (*6*). Several reports, apparently based on the

*Department of Computing Science, Simon Fraser University, Burnaby, B.C. V5A 1S6, Canada.
†Theodor D. Sterling Ltd., Suite 70, 1507 W. 12th Ave., Vancouver B.C. V6J 2E2, Canada.

experience of physicians with patients who complained of dryness of the nose and throat during low relative humidities, have also argued that indoor relative humidities should be kept above 30 to 40% in order to prevent drying of the mucous membranes and to maintain adequate nasal mucus transport and ciliary activity (*7–10*). These known or suspected adverse effects of low relative humidity have led to the widespread use of humidifiers in areas where cold winters lead to low indoor humidities.

However, there is little experimental evidence to indicate that the mucous membranes of healthy individuals are adversely affected by low relative humidities (*11*), though there is also little evidence to the contrary. The only experimental investigation of this problem failed to find a relationship between low humidity and dehydration of the mucous membranes. Andersen et al. (*12*) examined the posterior nasal mucociliary flow of eight healthy male subjects between 21 and 26 years of age exposed to 9% relative humidity in a climate chamber for 3 days. The mucosal flow actually increased after 3 days of exposure at 23°C compared to the control period of exposure to 50% relative humidity at the same temperature. There were few complaints of skin or membrane dryness. It is also possible that considerably longer periods of exposure to low relative humidities are required to cause drying of the mucosal membranes, or that an interaction between low relative humidity and dusts or pollens may irritate mucous membranes.

Relative humidity may, however, directly affect the mucous membranes of individuals with bronchial constriction, rhinitis, or cold and influenza related symptoms. One study found that the humidification capacity of the anterior nose was reduced during rhinitis (*13*), and another study found a small decrease in the humidifying capacity of the nose among four subjects with atrophic rhinitis compared to 22 normal subjects (*14*). Relative humidity may also affect bronchial mucus if nasal congestion leads to breathing through the mouth. An *in vitro* study on the effect of relative humidity on the viscosity of bronchial mucus found a twofold decrease in viscosity when the relative humidity was 100% versus 60% (*15*). Water mist, produced intentionally or accidentally by several types of humidifiers, may be partly responsible for the beneficial effects of humidification, as mists have been found to reduce mucus viscosity (*16*) and to reduce the incidence of upper respiratory infections, cough, and rhinitis among children with recurrent upper respiratory illness (*17*).

Relative humidity also has an important adverse direct effect on health when high humidities are combined with high temperatures. This combination reduces the rate of evaporative cooling of the body and can cause considerable discomfort or lead to heat stroke, exhaustion, and possibly death.

Indirect Health Effects

Case reports and epidemiological studies suggest that relative humidity and humidification equipment can indirectly affect the incidence of allergies and infectious respiratory diseases. This effect is caused by the impact of both relative humidity and humidification equipment on the population growth and survival of infectious or allergenic organisms such as fungi, protozoans, mites, bacteria and viruses, as well as the probability of effective contact (exposure that results in disease or adverse symptoms) with these organisms. These indirect effects may partially account for the suspected relationship between respiratory infections and nose or throat irritation and relative humidity. In addition, relative humidity affects the concentration of noxious chemicals in the air by altering the rate of offgassing from building materials and by the reaction of water vapor with chemicals in the air.

A review of the available data on the indirect health effects of relative humidity shows that these effects do not uniformly increase or decrease in frequency or severity with a change in relative humidity. Instead, for a given relative humidity, some adverse health effects can be at a maximum while others are at a minimum. The relative humidity range for minimizing as many adverse health effects as possible appears to lie between 40 and 60%. The evidence to support this optimum relative humidity range is presented below.

Relative Humidity and Infectious Diseases

Diseases may be transmitted by airborne pathogens or through direct contact with pathogens living on hard surfaces such as furniture and plumbing fixtures, or by touching an infected person. Low relative humidities have been found to improve the survival of rhinoviruses and influenza virus (*18*) and human rotavirus (a cause of gastroenteritis) (*19*) on hard surfaces. However, the majority of illness caused by direct contact is thought to be due to contact with an infected person, and this latter mode of transmission is not known to be influenced by relative humidity. Conversely, experimental studies on the survival of pathogens in the air at various relative humidities and epidemiological studies on respiratory infections suggest that the indoor relative humidity can affect the incidence of infectious diseases transmitted by airborne pathogens.

The incidence of airborne-transmitted infectious diseases in the indoor environment is dependent upon six factors: the number of infected people producing contaminated aerosols, the number of susceptibles, the length of exposure, the ventilation rate, the settling rate of contaminated aerosols, and the survival of pathogens attached to aerosols (*20*). The indoor relative humidity can affect two of these six factors: the settling rate of aerosols and the survival of airborne pathogens. Therefore, the importance of relative humidity as a determinant of the incidence of infections will depend upon the relative strength of these two factors compared to the other four. For example, relative humidity would probably have little or no effect on the incidence of infectious diseases in environments with very high fresh air ventilation rates.

Settling Rates of Aerosols

The amount of aerosols in a given volume of air is partially dependent upon the settling rates, which are a function of air movement and aerosol diameters (for aerosols with a diameter less than 100 μm). High settling rates reduce the abundance of aerosols which, in turn, reduce the probability of effective contact with aerosols contaminated with pathogenic substances.

Low relative humidities may increase the abundance of infective aerosols produced by coughing or exhaling. Rapid evaporation in dry air may cause the diameter of some aerosols to fall below the size limit for a particle to remain in suspension, whereas at higher relative humidities the same aerosol may reach the floor before sufficient evaporation occurs (*21*). Mid-range relative humidities (50–70%) have only a minor effect on aerosol size and subsequent settling rates (*22*). However, depending upon the initial composition and size of the aerosol, aerosol size may increase rapidly due to water absorption when the relative humidity exceeds 80 to 90%, leading to higher settling rates (*23*).

In the United States and Canada, an increase in the abundance of suspended aerosols as a result of low relative humidities is more likely to have an effect on health than the decrease in aerosols during periods of very high relative humidity. Low indoor relative humidities are common in winter, when indoor air ventilation rates are low and occupancy rates are high, whereas relative humidities above 80% are most likely to occur in summer, when better indoor ventilation through open windows and doors would reduce the possibility of effective contact with contaminated aerosols. Furthermore, the increase in air movement in summer would most likely cancel out the expected increase in settling rates due to an increase in aerosol size.

Experimental Studies on the Survival of Airborne Pathogens

Experimental studies have shown that relative humidity is an important factor in the survival of airborne pathogens. Relative humidity is thought to affect survival by altering the integrity of the cell wall or viral coat (*24*).

Bacteria

Bacteria that cause pneumonia, tuberculosis, Q fever, brucellosis, anthrax and Legionnaire's disease are air transmitted (*25*). However, little is known directly about the effect of relative humidity on the airborne survival or infectivity of pathogenic bacteria. On the other hand, the effect of relative humidity on nonpathogenic bacterial species such as *E. coli* has been extensively studied. In general, mid-range humidities (40–60%) are more lethal to airborne nonpathogenic bacteria than low or high humidities (*24*).

A few studies on pathogenic or closely related bacterial species suggest that the response of pathogenic bacteria to relative humidity is similar to that of nonpathogenic varieties. *Mycoplasma pneumoniae* is an airborne-transmitted bacterium that can cause pneumonia or other severe respiratory infections. Tests on nonpathogenic Mycoplasma species indicate that the mycoplasms survive longer during exposure to either high or low relative humidities (*26*). A similar pattern of survival is found for a nonpathogenic species of Streptococcus (*27*). *Serratia marcescens*, an opportunistic bacterium that causes respiratory infections among patients in hospitals, is least viable during exposure to 50% RH and reaches maximum viability above 80% RH (*28*). High relative humidities above 70 to 80% are also preferred by *Brucella suis* (*29*) and by *Staphylococcus albus* (*30*).

Viruses

The major airborne-transmitted viruses include influenza, measles, herpesvirus varicellae (the cause of chickenpox), rubella, the adenoviruses (the cause of acute respiratory disease with influenzalike symptoms), and the coxsackie viruses (the cause of some rashes and fevers) (*20,31,32*). Respiratory syncytial and para influenza viruses (both of which cause flulike symptoms) and rhinoviruses (the most frequent cause of the common cold syndrome) can also be transmitted by air, but the incidence of infections as a result of airborne transmission is thought to be very low compared to direct contact (*20,33*).

The effect of humidity on the viability of viruses depends on the viral molecular structure. High relative humidity tends to favor the survival of viruses composed entirely of nucleic acids and proteins, whereas lipid containing viruses prefer low relative humidities (*34*).

The adenoviruses and the coxsackie viruses prefer relative humidities above 70% (*35,36*). Measles, influenza, herpesvirus varicellae, and rubella viruses survive longer during exposure to relative humidities below 50%.

Mass vaccination programs have reduced the public health significance of measles and rubella while infections due to adenovirus and coxsackie viruses normally occur at a low incidence rate in the population. Consequently, the influenza virus is the most important airborne-transmitted viral disease.

Several laboratory studies have examined the relationship between relative humidity and influenza virus survival or infectivity. Hemmes et al. (*37*) and Harper (*38*) independently tested the viability of influenza virus attached to aerosols over a wide range of relative humidity. Both investigators sampled the air at various times after aerosol generation and tested for viral viability by inoculating live cell cultures with the air samples. Hemmes found that viral inactivation rates increased sharply at relative humidities above 40%. Similarly, Harper found the percentage of viable influenza virus to decrease as the relative humidity was increased from 35% to 81%. Schulman and Kilbourne (*39*) directly tested the effect of relative humidity on the airborne transmission of influenza in mice. Uninfected mice were placed in cages adjacent to, but not touching, cages of mice infected with influenza. The effect of relative humidity was determined

after adjusting for the dilution effect of changes in ventilation. The infection rate decreased as the relative humidity was increased from 47% to 70%.

The results of these experiments suggest that influenza infection rates are highest in environments with relative humidities below 40% and decrease rapidly as the relative humidity exceeds 40 to 50%. However, Lester (*40*) found that the rate of infection in mice exposed to aerosols containing influenza virus increased both below 40% and above 55% RH and was minimized during exposure to 55% RH. Schaffer et al. (*41*) found similar results. Aerosols of influenza virus cultivated in human cells were exposed to relative humidities between 20 and 80%. Viral survival was highest after exposure to 20% RH, fell to a minimum after exposure to relative humidities between 40 and 60%, and increased again after exposure to 70 to 80% RH, though the survival rate at 80% RH was less than the rate at 20% RH. Consequently, it is possible that the infectivity of influenza virus shows an increase at both high and low relative humidities. Variations in the experimental results might have been due to different methods of preparing aerosols.

In summary, the available data on bacterial and viral survival at varying relative humidities indicate that there is a mid-range of relative humidity, approximately between 40% and 70%, that minimizes the combined survival or infectivity of these organisms. The available data suggest that the actual incidence of airborne-transmitted diseases in humans should be lowest in indoor environments with mid-range relative humidities, given similar rates of occupancy and ventilation.

Epidemiological Studies on Respiratory Infections

Several investigators have noted that the incidence of respiratory infections increases in winter when people are exposed for long periods of time to low indoor humidity levels (*34,37,42*). Nine epidemiological studies have provided further information on this hypothesis. Eight of these studies examined the effect of increasing relative humidity from low to mid-range levels by using humidifiers and one study examined the incidence of respiratory infections in homes with high versus mid-range relative humidities.

Gelperin (*43*) examined the relationship between indoor relative humidity and the incidence of respiratory illness among 800 army recruits in two barracks, one of which was humidified. Ventilation rates were carefully controlled. The relative humidity averaged 20% in the unhumidified barrack and 40% in the humidified barrack. There were 8% fewer upper respiratory infections among soldiers in the humidified barrack between October and December and 18% fewer infections between January and March compared to recruits in the barrack without humidification.

Sale (*44*) found a significant reduction in respiratory infection among children attending a humidified school. The effect was intensified if the home was also humidified. The children were divided into four groups depending on the presence or absence of humidification in the school and/or home. The average weekly absentee rate due to respiratory infections was 7.1% for children without humidification at school or at home, 5.1% for children with humidification at home only, 3.9% for children with humidification at school only, and 1.3% for children with humidification at school and at home.

Ritzel (*45*) noted a decrease in colds, sneezing, sore throats, and fever in kindergarten children after the average relative humidity in the kindergarten was increased from 40 to 49%.

Several studies have used absentee rates as an estimate of respiratory infections since approximately 50% of absenteeism from school or work is caused by viral respiratory diseases (*46*). Green (*47*) correlated daily winter relative humidity levels and absentee rates for six schools in Saskatoon and six in Halifax. Absentee rates decreased with an increase in relative humidity but the correlation was not statistically significant. A second study by Green (*48*) combined data for 11 years from 12 Saskatoon schools and found a statistically significant linear correlation between relative humidity and percent absenteeism. Absenteeism dropped by 20% as the average relative humidity increased from 22% to 35%. Conversely, Sataloff and Menduke (*49*) found a higher incidence of illness in children from a humidified versus a nonhumidified school. However, the relative humidity in the humidified school was only 3% greater than in the nonhumidified school and the difference in illness rates was not statistically significant.

The relationship between absentee rates and humidity was examined in two studies on Swiss office workers. Serati and Wuthrick (*50*) reported significantly fewer absences in a humidified versus nonhumidified office. On the other hand, Guberan et al. (*51*) did not find a significant difference in a similar study that examined absenteeism due to respiratory infections.

Melia et al. (*52*) compared the incidence of respiratory conditions such as colds, wheezing, and bronchitis among English children with several factors in the home environment. The relative humidity was measured in the children's bedrooms and exceeded a mean weekly value of 55% for 74% of the homes. There was a higher incidence of respiratory conditions among 31 children from homes with mean weekly humidity levels above 75% compared to 125 children from homes with lower mean relative humidity levels. The difference was statistically significant for boys. There were no significant differences in the incidence of respiratory conditions among children from homes with mean relative humidities below 55% versus the 55 to 74% range. Furthermore, no statistically significant relationships were found between the incidence of respiratory infections and the children's age, sex, class, home temperature, or parents' smoking habits.

Table 1 summarizes the results of the eight epidemiological studies on the incidence of respiratory infections or absenteeism among the occupants of buildings with low versus mid-range relative humidities. Five out

Table 1. Epidemiological studies on relative humidity (RH) and respiratory infections (RI).

Study population	Date	Unhumidified buildings			Humidified buildings			% Change	Significance level (p)
		Pop'n size	% RH	RI or absentee (Abs) rate	Pop'n size	% RH	RI or absentee (Abs) rate		
Kindergarten children (45)	Jan–Mar	not stated	40	5.7% Abs	not stated	49	3.0% Abs	-47	≤0.01
School children (49)	Oct–Mar	not stated	26.6	3.9 RI/child	not stated	29.6	4.6 RI/child	+18	not significant (ns)
Nursery school children (44)	Oct–Mar	281	31–39	7.1% Abs/week due to RI (in 2 schools)	39 (home and school)	51	1.3% Abs/wk due to RI	-82	≤0.01
					101 (school only)		3.9%	-45	≤0.01
					95 (home only)		5.1%	-28	≤0.01
School children (47)	Oct–Apr	6 schools	18–30	—	—	—	—	—	ns correlation analysis
	Dec–May	6 schools	21–30	—	—	—	—		
School children (48)	11 yrs	4 schools	22–25	5.11% Abs	7 schools	25–35	4.6% Abs	-10	≤0.01
Army recruits (43)	Oct–Dec	378	20	1.28 RI/recruit	365	40	1.17 RI/recruit	−8	≤0.01
	Jan–Mar	418	20	1.29 RI/recruit	400	40	1.06 RI/recruit	−18	≤0.01
Office workers (50)	Nov–Apr (64–65)	70	31	65.5 Abs/100 workdays	35	40	55 Abs/100 workdays	−15	≤0.01
	Nov–Apr (65–66)	66	41.1	64 Abs/100 workdays	33	48.6	60 Abs/100 workdays	−6	≤0.01
Office workers (51)	Jan–Mar	215	30	37.7 RI/100 women	86	33	35.6 RI/100 women	−6	ns
		273		23.2 RI/100 men	104		30.5 RI/100 men	+31	ns

of the eight studies found a statistically significant reduction in respiratory infections/absenteeism among people in humidified buildings. One study found a nonsignificant reduction in absenteeism among children attending a humidified school, and two studies found an increase in absenteeism among people exposed to humidification, though the results were not statistically significant. The single study with data on high relative humidities found significantly more respiratory conditions among boys from homes with very high relative humidity levels. Therefore, the epidemiological evidence, combined with the results on bacterial and viral survival at various relative humidities, tends to support the conclusion that the incidence of respiratory infections is partially dependent upon the indoor relative humidity and is reduced by a change in relative humidity from low or high to mid-range (40–60%) levels.

The epidemiological evidence cannot, however, be considered as conclusive, as many of the studies did not carefully control for possible confounding variables such as ventilation and occupancy rates. Both a decrease in the fresh air ventilation rate and an increase in the occupancy rate in winter can partly account for the seasonal incidence of respiratory infections. The ventilation rate has been shown in animal experiments (*39*) to significantly affect the incidence of respiratory infections and the occupancy rate has been found in field studies to affect the number of infections during influenza epidemics (*53,54*).

The specific mechanism by which mid-range relative humidities might decrease the incidence of respiratory infections cannot be determined from the available studies. The decrease might be due to alterations in aerosol settling rates, a decrease in the survival of airborne-transmitted viruses (and possibly in the survival of viruses, attached to surfaces such as dishes and furniture, that are transmitted by direct contact) or to a decrease in human susceptibility to infection. The latter possibility has been considered by Lubart (*7,8*) and Zeterberg (*9*), who suggested, on the basis of case reports, that low humidities increase susceptibility to common colds after direct contact has occurred by drying the protective mucous membranes of the nose and throat. As discussed earlier, there is presently little experimental or epidemiological evidence for this view. It is possible that the dry patches noted by Lubart in the throat and nose of patients were the result of, and not a contributing cause of, infection.

Relative Humidity and Allergens

About 10% of the population is estimated to suffer from allergies (*55*). The abundance of two major causes of allergy, mites and fungi, increases proportionately with the average indoor relative humidity. An additional problem is introduced by humidification equipment which can gen-

erate aerosols that are contaminated with fungi or bacteria that cause allergic diseases such as asthma, rhinitis and hypersensitivity pneumonitis.

Mites

Mites are the most important cause of house dust allergies. Laboratory studies have determined that populations of the common house mite, *Dermatophagoides pteronyssinus*, reach a maximum size during exposure to 80% RH (*56*).

Several field studies have found that the number of mites in residences closely parallels seasonal changes in the indoor relative humidity. In addition, mite populations were almost eliminated in winter when the relative humidity fell below 40 to 50%. For example, Korsgaard (*57*), in a sample of 98 houses, found fewer than 10 live mites per gram of house dust when the relative humidity was below 45%. Arlian et al. (*58*), in a two-year study of mites in 19 houses, found that the number of mites per gram of dust varied between 400 to 1100 at 70% RH but fell to fewer than 50 at 40% RH. Murray and Zuk (*59*) in a two-year study of mites in two houses found no mites at all when the indoor relative humidity fell below 50%.

The studies by Korsgaard and Arlian et al. also found that the indoor relative humidity was the most important determinant of mite abundance. Both studies found that mite density was unaffected by the age of the building or by the thoroughness of house cleaning.

Korsgaard also examined the relationship between relative humidity, mites and allergies, among 75 patients with mite allergies and 23 nonallergic controls. The median relative humidity in the patients' houses was 50% compared to 43% among the controls. The difference boarded on statistical significance with $p = 0.054$. The number of mites per gram of dust was also consistently higher in the patients' houses compared to the controls over three sampling locations. The results suggest the possibility of a direct cause and effect relationship between higher average indoor relative humidities and allergies due to mites.

Humidification can have a significant impact on mite abundance. One study found an average of 703 mites per gram of dust in six humidified houses versus 197 in nine houses without humidification (*60*).

Fungi

Fungi known to cause allergic reactions such as asthma or rhinitis are of the genera Alternaria, Cladosporium, Aspergillus, Mucor, Rhizopus, and Merulius. (*61*). Several fungi such as Aspergillus can also cause hypersensitivity disease in individuals that do not normally suffer from allergies (*62*).

The majority of fungi require relative humidities in excess of 75% in order to grow. Consequently, actively growing fungal populations are usually limited to areas such as kitchen and bathroom walls and window frames subject to frequent condensation as a result of locally high relative humidities (*61*). Ceiling tiles in office buildings can be a common source of fungal contamination, especially in buildings with ceiling-mounted air ducting systems, as the tiles may be directly exposed to moisture when the air conditioning system is in use. In addition, damp organic material such as leather, cotton, paper furniture stuffing, and carpets can be contaminated with fungi (*1*).

A cause-and-effect relationship between high indoor relative humidities and allergies is complicated by the fact that many of the allergenic fungi are ubiquitous in both the indoor and outdoor environment. Consequently, it can be difficult to determine if a fungal allergy is the result of outdoor or indoor exposure or if indoor fungal contamination is derived from indoor or outdoor sources. However, Solomon (*63*) found higher average relative humidities and fungal isolates per cubic meter of indoor air between December and March in the homes of 92 patients with allergies compared to the homes of 58 controls without allergies. The relative humidity averaged 35.5% with 342 isolates per cubic meter of air in the patients' homes compared to an average relative humidity of 26% and 226 isolates for the control group.

Humidifiers

Humidifiers have both a positive and negative effect on allergies. The beneficial effect of humidification on allergies was shown by a study that examined the effect of home humidification on 817 patients with allergies; 65% of the patients reported an excellent improvement in their condition, and 30% reported a good improvement after home humidifier installation and use. The subjects reported a decrease in the dryness of the nose and throat and improved nasal and bronchial breathing during humidifier use (*10*).

On the other hand, humidification equipment is frequently contaminated with allergenic bacteria, protozoa, or fungi that can cause allergies if they are disseminated into the air. Microorganisms in humidifiers can proliferate at a very fast rate under favorable temperature and moisture conditions and be circulated as an aerosol throughout an entire building. The process of growth and continuous recirculation increases both the amount and duration of exposure and can increase the possibility of effective contact. Humidifier contamination is a particularly serious problem in hospitals where opportunistic bacteria and fungi disseminated by humidifiers have been found to cause serious infections in immunosuppressed patients (*64,65*).

Humidifiers have been found to be contaminated with the fungi Aspergillus (*66*), Micropolyspora species (*67*), Alternaria, Penicillium, Mucor, and Aspergillus (*68*), and Hormodendrum, Ustilago, Rhodotorula and Crytococcus (*69*); the bacteria *Staphylococcus aureus* (*68*), *Pseudomonas aeruginosa* (*70*), Enterobacter species (*71*), and Acinobacter species (*65*); and the allergenic amoebae *Naegleria gruberi* and *Acanthamoebae* (*72,73*).

Epidemics of diseases caused by *Legionella pneumophila* in hospitals and offices have been traced to contaminated air conditioning equipment and cooling towers

but there are no reported cases of Legionnaire's Disease attributable to humidifiers. Humidifier water temperatures are usually below the temperature range of 35 to 40°C preferred by Legionella. However, *L. pneumophila* was found in a hospital humidifier and was shown experimentally to cause an immunological response in guinea pigs (*74*). This suggests that contaminated humidifiers can potentially cause *L. pneumophila* infections in humans.

Most humidifier-related health problems are caused by humidifiers which draw water from a reservoir and generate a cool mist. The mist can readily disperse small particles of contaminants growing in the water reservoir. Evaporative humidifiers are designed to produce only water vapor which is not contaminated with other particles. Burge et al. (*75*) sampled 111 mostly evaporative domestic humidifiers and found microbial contamination rates of 77 to 89%. In this case, the humidifiers did not appear to cause contamination of the indoor air. In another study, however, evaporative humidifiers were linked to an increase in the number of bacteria in the air of hospital rooms suggesting that some evaporative humidifiers can produce a small amount of aerosol in addition to vapor (*71*). Evaporative humidifiers can also produce contaminated aerosols if the humidifier fan blows air through a contaminated filter (*76*).

There are a large number of reported cases of allergic diseases that have been traced to humidification equipment. Table 2 summarizes the results of several reports on allergies and hypersensitivity disease caused by the use of humidifiers in residential, office, and factory environments (*66,69,77–87*).

Relative Humidity and Noxious Chemicals

Several chemicals that can be found in indoor air interact with water vapor to form respiratory and dermal irritants. Health problems attributable to chemical interactions with humidity are probably less widespread than problems caused by biological interactions. However, chemical interactions can be important in buildings with a high proportion of formaldehyde-containing materials, gas stoves for cooking, or geographically located near outdoor sources of water-reactive air pollutants.

Formaldehyde

Low-level exposure to formaldehyde has produced adverse health effects such as irritation to the skin, eyes and throat, respiratory disorders and allergies (*1*).

As formaldehyde is water-soluble, high relative humidities promote the off-gassing of formaldehyde from urea–formaldehyde foam insulation and from numerous other sources such as plywood, paper and other wood products, carpets and textiles (*88*). A climate chamber investigation into the rate of off-gassing of formaldehyde from chipboard found that formaldehyde concentrations in the air were directly proportional to the relative humidity at a given temperature. Formaldehyde levels increased from

Table 2. Reports of allergies caused by humidifier contaminants.

Subjects	Diagnosis or symptoms	Contaminant	Confirmation
11 office workers (77)	Fever, malaise, chest tightness, polyuria	*Acanthamoeba* spp.	Symptoms disappeared 4 weeks after the humidification system corrected
26 office workers (78)	Fever, chills, cough, dyspnea	Unknown, possibly protozoa	No symptoms 5 months after humidification system removed
24 factory workers (79)	Extrinsic allergic alveolitis	*Phialophora* spp., *Cephalosporium*, *Fusarium*, *Gliomastix*	Precipitins to humidifier water, symptoms ceased after alteration to system
20 factory workers (80)	Fever, chills, dyspnea	*Pseudomonas* endotoxins in humidifier	Not stated
3 housewives (81)	Recurrent acute interstitial lung disease	*Thermoactinomyces* in home humidifier	Positive bronchial challenge to hemophile
1 male (69)	Recurrent pneumonia	Fungi and bacteria in humidifier	Challenge with vaporizer aerosol positive, specific agent unidentified
1 female (82)	Recurrent hypersensitivity pneumonitis	Thermotolerant bacteria in home humidifier	Positive bronchial challenge, positive serum
1 female (83)	Hypersensitivity pneumonitis	Unknown organisms in home humidifier	Positive pulmonary challenge to humidifier water, all family members showed precipitin reactions
1 female (84)	Hypersensitivity pneumonitis	*Cephalosporium* in home humidifier	Precipitins to antigens
2 asthmatics (66)	Asthmatic episodes	Yeast contaminated aerosols in humidifier	Recurrent symptoms on re-exposure
1 female (85)	Pneumonitis, recurrent chills, fever, cough, dyspnea	Thermophilic actinomycetes in home humidifier	Positive bronchial challenge
1 male (86)	Hypersensitivity pneumonitis	*Thermoactinomyces vulgaris* in console home humidifier	Symptoms disappeared when humidifier removed, precipitating antibodies
1 female (87)	Hypersensitivity pneumonitis	*Thermoactinomyces vulgaris* in humidifier	Precipitins against agent

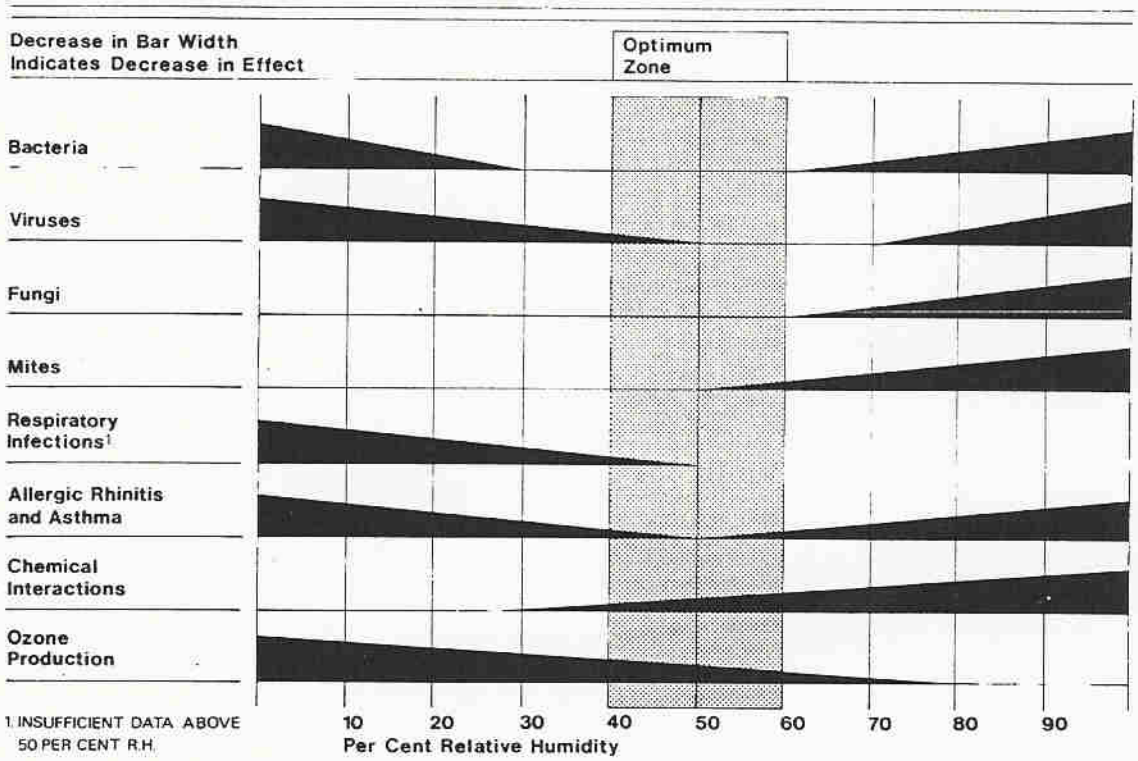

FIGURE 1. Optimum relative humidity range for minimizing adverse health effects.

0.5–0.6 mg/m^3 at 30% RH to 1.2–2.0 mg/m^3 at 70% RH (*89*). A field study of formaldehyde levels in 20 homes found a statistically significant ($p < 0.01$) correlation between the indoor relative humidity and the formaldehyde concentration in the air (*90*).

Sulfur and Nitrogen Dioxides

Sulfur dioxide acts as a respiratory irritant in healthy subjects and causes bronchial constriction in sensitive individuals such as asthmatics at concentrations as low as 0.1 ppm (*91*). Sulfur dioxide combines with water vapor to form aerosols containing sulfate salts and sulfuric acid which are more irritating than sulfur dioxide itself (*92*).

Nitrous and nitric acids are formed indoors by the interaction of water vapor with nitrogen dioxide from unvented gas cooking stoves and heaters. Both acids are thought to play an etiological role in the development of respiratory illness and decreased pulmonary function (*93*).

Ozone

Indoor ozone levels are enhanced by low relative humidities whereas high relative humidities reduce ozone concentrations by accelerating the adsorption of ozone molecules onto indoor surfaces (*94*). Ozone is a strong oxidizing agent and in the exposure range likely encountered in a residence, acts as an irritant to the eye and mucous membranes (*95*).

Occupational Dermatoses

The number of complaints of skin irritation such as urticaria, erythema, and eczema among employees of several factories and a telephone exchange building decreased after the relative humidity was increased from 30 to 40% to above 50%. Skin irritation may have been partly caused by an interaction between low relative humidities and chemicals such as trichloroethylene (*96*), cyanoacrylate (*97*), and a methacrylate polymer (*98*).

Conclusions

This review of the indirect health effects of relative humidity indicates that adverse health effects would be minimized by maintaining relative humidity between 40 and 60%. Presently indoor relative humidity levels below 40% are widespread in winter. An increase in low relative humidities to above 40% should reduce the incidence of respiratory infections, the severity of allergic and asthmatic reactions, and indoor ozone levels. Relative humidity levels above 60% can occur in summer, especially in air-conditioned buildings, or in kitchens and bathrooms during the winter. A reduction in high relative humidity levels to below 60% should reduce the abundance of allergenic mites and fungi and the concentration of formaldehyde, and acids and salts of sulfur and nitrogen dioxides in the air.

The effect of relative humidity on biological and chemical factors is graphically summarized in Figure 1. The shape and height of the bars in the figure are only sugges-

tive of an increase or a decrease in effect and do not represent quantitative data. Most of the health effects either increase in severity above 60% and/or below 40% relative humidity. The exceptions are most chemical interactions which consistently increase above 30% and conditions that produce ozone, which consistently increase in severity with a decline in relative humidity. The shaded portion of the graph indicates the approximate optimum mid-range zone for minimizing adverse health effects attributable to relative humidity.

The adverse health and comfort effects of low relative humidities indicate that the use of humidifiers should be encouraged in regions with low indoor relative humidities during winter. A decrease in morbidity and possibly mortality due to influenza may be the most important beneficial result of an increase in relative humidity from low to mid-range levels.

However, humidification equipment must be properly maintained and sterilized in order to prevent microbial contamination. Unfortunately, commonly used humidifier sterilants such as bleach have not been effective in preventing humidifier contamination (*75*). Sterilants can also introduce a new set of health problems if the sterilant itself is disseminated by the humidifier. For this reason it may be preferable to encourage the use of evaporative versus aerosol-forming humidification systems as there are fewer dissemination problems associated with the former system. Another option is to use steam as a humidifying aerosol.

Humidification must also be approached cautiously, as an increase in the average relative humidity may cause structural damage to the building or result in pockets of high relative humidity leading to undesirable mite or fungal growth. Structural damage is most likely in older buildings without vapor barriers as moisture can diffuse into the wall and condense on the outside sheathing. For example, condensation on the sheathing surface of an uninsulated house without a vapor barrier will occur when the outdoor temperature falls below ¯10°C and the indoor relative humidity exceeds 15% (*99*). Pockets of high relative humidity occur in most buildings because of variations in the location of humidity sources and room ventilation rates. This problem indicates that average relative humidities throughout a building should be kept, if possible, at the low end of the suggested range of relative humidity.

The indirect health effects of relative humidity may be growing in importance as a result of the continuing construction of energy efficient sealed buildings with low fresh air ventilation rates. The high fresh air ventilation rates found in older leaky buildings may dilute the concentration of pathogens, allergens and noxious chemicals in the indoor air and thus offset some of the health problems associated with relative humidity. In contrast, energy-conserving buildings require the careful maintenance of good indoor air quality through maintaining, among other factors, optimum relative humidity levels in order to minimize potential health problems.

This review of the indirect health effects of indoor relative humidity was partly funded by the Criteria Section, Environmental Health Directorate, Health and Welfare Canada, Contract # 1032. We are indebted to Dr. Sitwell, of Health and Welfare Canada, as a persistent and detailed reviewer; to Chris Collett, of Theodor D. Sterling Ltd. for valuable research assistance; and to Dr. G. Green, of the University of Saskatchewan for advice.

REFERENCES

1. NAS (National Academy of Sciences). Indoor Pollutants. National Academy Press, Washington, DC, 1981.
2. Sterling, T. D., and Arundel, A. Possible carcinogenic components of indoor air: combustion byproducts, formaldehyde, mineral fibers, radiation, and tobacco smoke. J. Environ. Sci. Health C2: 185–230 (1984).
3. Meyer, B. Indoor Air Quality. Addison-Wesley, Reading, Mass., 1983.
4. McIntyre, D. A. Response to atmospheric humidity at comfortable air temperature: a comparison of three experiments. Ann. Occup. Hyg. 21: 177–190 (1978).
5. Eng, W. G. Survey on eye comfort in aircraft: 1. Flight attendants. Aviat. Space Environ. Med. 50: 401–404 (1979).
6. Strauss, R. H., McFadden, E. R., Ingram, R. H., Deal, E. C., and Jaeger, J. Influence of heat and humidity on the airway obstruction induced by exercise in asthma. J. Clin. Invest. 61: 433–440 (1978).
7. Lubart, J. The common cold and humidity imbalance. N.Y. State J. Med. 62: 817–819 (1962).
8. Lubart, J. Health care containment cost. Am. J. Otolaryngol. 1: 81–83 (1979).
9. Zeterberg, J. M. A review of respiratory virology and the spread of virulent and possibly antigenic viruses via air conditioning systems. Ann. Allergy 31: 228–234 (1973).
10. Sale, C. S. Humidification during the cold weather to assist perennial allergic rhinitis patients. Ann. Allergy 29: 356–357 (1971).
11. Proctor, D. F. Nasal mucous transport and our ambient air. Laryngoscope 93: 58–62 (1983).
12. Andersen, I. B., Lundqvist, G. R., Jensen, P. L., and Proctor, D. F. Human response to 78 hour exposure to dry air. Arch. Environ. Health 29: 319–324 (1974).
13. Ingelstedt, S. Studies on the conditioning of air in the respiratory tract. Acta Otolaryngol. (Suppl.) 131: 1 (1956).
14. Drettner, B., Falck, B., and Simon, H. Measurements of the air conditioning capacity of the nose during normal and pathological conditions and pharmacological influence. Acta Otolaryngol. 84: 266–277 (1977).
15. Richards, J. H. Effect of relative humidity on the rheological properties of bronchial mucus. Am. Rev. Resp. Dis. 109: 484–486 (1974).
16. Dulfano, M. J., Adler, K., and Wooten, O. Physical properties of sputum IV. Effects of 100 per cent humidity and water mist. Am. Rev. Resp. Dis. 107: 130–132 (1973).
17. Varsano, I., Mukamel, M., Shuper, A., Volovitz, B., Shrem, M., and Jaber, L. The efficiency of nebulization treatment with water compared to sodium cromoglycate in reducing upper respiratory infections in children. Helv. Paediat. Acta 38: 335–339 (1983).
18. Buckland, F. E., and Tyrrell, D. A. J. Loss of infectivity on drying various viruses. Nature 195: 1063–1064 (1962).
19. Moe, K., and Shirley, J. A. The effect of relative humidity and temperature on the survival of human rotavirus in faeces. Arch. Virol. 72: 179–186 (1982).
20. Couch, R. B. Viruses and indoor air pollution. Bull. N. Y. Acad. Med. 57: 907–921 (1981).
21. Smith, F. B. Atmospheric factors affecting transmission of infections. Practitioner (U.K.) 227: 1667–1677 (1983).
22. Fitzgerald, J. W. Approximation formulas for the equilibrium size of an aerosol particle as a function of its dry size and composition and the relative humidity. J. Appl. Meteorol. 14: 1044–1049 (1975).
23. Hanel, G. Humidity effects on gravitational settling and brownian diffusion of atmospheric particles. Pure Appl. Geophys. 115: 775–797 (1977).
24. Hatch, M. T., and Wolochow, H. Bacterial survival: consequences of the airborne state. In: An Introduction to Experimental Aero-

biology (R. L. Dimmick and A. B. Akers, Eds.), John Wiley and Sons, New York, 1969.
25. LaForce, F.M. Airborne infections and modern building technology. In: Proceedings of the 3rd International Conference on Indoor Air Quality and Climate 1: Recent Advances in the Health Sciences and Technology, (B. Berglund, T. Lindvall, and J. Sundell, Eds.), Swedish Council for Building Research, Stockholm, Sweden, 1984, pp. 109–127.
26. Wright, D. N., Bailey, G. D., and Hutch, M. J. Survival of airborne mycoplasma as affected by relative humidity. J. Bacteriol. 95: 251–252 (1968).
27. Flynn, D. D., and Goldberg, L. J. Effect of relative humidity on aerosol persistence of *Streptococcus salivarius*. Arch. Environ. Health 23: 40–42 (1971).
28. Anderson, J. D., Dark, F. A., and Peto, S. The effect of aerosolization upon survival and potassium retention by various bacteria. J. Gen. Microbiol. 52: 99–105 (1968).
29. Rosebury, T. Experimental Airborne Infection. Williams and Wilkins, Baltimore, 1947.
30. Webb, S. J. Factors affecting the viability of airborne bacteria. 1: Bacteria aerosolized from distilled water. Can. J. Microbiol. 5: 649–669 (1959).
31. Langmuir, A. D. Changing concepts of airborne infection of acute contagious diseases: a reconsideration of classic epidemiologic theories. Ann. N. Y. Acad. Sci. 353: 35–44 (1980).
32. Moffet, H. L. Clinical Microbiology. J. B. Lippincott, Philadelphia, 1980.
33. Gwaltney, J. M. Epidemiology of the common cold. Ann. N. Y. Acad. Sci. 353: 54–60 (1980).
34. Knight, V. Viruses as agents of airborne contamination. Ann. N. Y. Acad. Sci. 353: 147–156 (1980).
35. Miller, W. S., and Artenstein, M. S. Aerosol stability of three acute respiratory disease viruses. Proc. Soc. Exptl. Biol. Med. 125: 222-227 (1967).
36. Davis, G. W., Griesemer, R. A., Shadduck, J. A., and Farrell, R. L. Effect of relative humidity on dynamic aerosols of adenovirus 12. Appl. Microbiol. 21: 676–679 (1971).
37. Hemmes, J. H., Winkler, K. C., and Kool, S. M. Virus survival as a seasonal factor in influenza and poliomyelitis. Nature 188: 430–431 (1960).
38. Harper, G. J. Airborne microorganisms: survival tests with four viruses. J. Hyg. 59: 479–486 (1961).
39. Schulman, J. L., and Kilbourne, E. D. Airborne transmission of influenza virus infection in mice. Nature 182: 1129–1130 (1962).
40. Lester, W. The influence of relative humidity on the infectivity of air-borne influenza A virus (pre-strain). J. Exp. Med. 88: 361–367 (1948).
41. Schaffer, F. L., Soergel, M. E., and Straube, D. C. Survival of airborne influenza virus: effects of propagating host, relative humidity, and composition of spray fluids. Arch. Virol. 51: 263–273 (1976).
42. Hope-Simpson, R. E. The epidemiology of non-infectious diseases. Roy. Soc. Health J. 78: 593 (1958).
43. Gelperin, A. Humidification and upper respiratory infection incidence. Heating, Piping, Air Conditioning 45: 3 (1973).
44. Sale, C. S. Humidification to reduce respiratory illnesses in nursery school children. S. Med. J. 65: 882–885 (1972).
45. Ritzel, G. Sozialmedizinsche Erhebungen zur Pathogenese und prophylare von Erkältungskankheiten. Z. Praventirmed. 11: 9–16 (1966).
46. NCHS (National Center for Health Statistics). Acute Conditions: Incidence and Associated Disability, United States July 1973–June 1974, National Center for Health Statistics, Rockville, Md., DHEW Publ. (HRA) 76-1529, 1975.
47. Green, G. H. The effect of indoor relative humidity on absenteeism and colds in schools. ASHRAE J. 80: 57–62 (1975).
48. Green, G. H. The effect of indoor relative humidity on colds. ASHRAE Trans. 85: 747–757 (1979).
49. Sataloff, J., and Menduke, H. Humidity studies and respiratory infections in a public school. Clin. Pediatrics 2: 119–121 (1963).
50. Serati, A., and Wuthrich, M. Luftfeuchtigkeit und Saison Krankheiten. Schweiz. Med. Wschr. 99: 48–50 (1969).
51. Guberan, E., Dang, V. B., and Sweetnam, P. M. L'humidification de l'air des locaux previent-elle les maladies respiratoires pendant l'hiver? Schwiez. Med. Wschr. 108: 827–831 (1978).
52. Melia, R. J. W., Florey, C., Morris, R. W., Goldstein, B. D., John, H. H., Clark, D., Craighead, I. B., and Mackinlay, J. C. Childhood respiratory illness and the home environment. 2: Association between respiratory illness and nitrogen dioxide, temperature and relative humidity. Int. J. Epidemiol. 11: 164–169 (1982).
53. Bell, J. A., Craighead, J. E., James, R. G., and Wong, D. Epidemiologic observations on two outbreaks of Asian influenza in a children's institution. Am. J. Hyg. 73: 84–89 (1961).
54. Hope-Simpson, R. E. First outbreak of Hong Kong influenza in a general practise population in Great Britain. A field and laboratory study. Brit. Med. J. 3: 74–77 (1970).
55. Pepys, J. Clinical therapeutic significance of patterns of allergic reactions of the lungs to extrinsic agents. Am. Rev. Resp. Dis. 1: 116 (1977).
56. Wraith, D. G., Cunnington, A. M., and Seymour, W. M. The role and allergenic importance of storage mites in house dust and other environments. Clin. Allergy 9: 545–561 (1979).
57. Korsgaard, J. Preventive measures in house-dust allergy. Am. Rev. Resp. Dis. 125: 80–84 (1982).
58. Arlian, L. G., Bernstein, I. L., and Gallagher, J. S. The prevalence of house dust mites, *Dermatophagoides spp*, and associated environmental conditions in homes in Ohio. J. Allergy Clin. Immunol. 69: 527–532 (1982).
59. Murray, A. B., and Zuk, P. The seasonal variation in a population of housedust mites in a North American city. J. Allergy Clin. Immunol. 64: 266–269 (1979).
60. Arlian, L. G., Brandt, R. L., and Bernstein, R. Occurrence of house dust mites, *Dermatophagoides spp.* during the heating season. J. Med. Entomol. 15: 35–42 (1978).
61. Gravesen, S. Fungi as a cause of allergic disease. Allergy 34: 135–154 (1979).
62. English, P. T. Medical Mycology. Edward Arnold, London, 1980.
63. Solomon, W. R. A volumemetric study of winter fungus prevalence in the air of midwestern homes. J. Allergy Clin. Immunol. 57: 46–55 (1976).
64. Crowley, T. P. Contaminated humidifiers. J. Am. Med. Assoc. 240: 348 (1978).
65. Smith, P. W., and Massinari, R. M. Room humidifiers as the source of Acinetobacter infections. J. Am. Med. Assoc. 237: 795–797 (1977).
66. Solomon, W. R. Fungus aerosols arising from cool-mist vaporizers. J. Allergy Clin. Immunol. 54: 222–228 (1974).
67. Fink, J. N., Resnick, A. J.,and Salvaggio, J. Presence of thermophilic actinomycetes in residential heating systems. Appl. Microbiol. 22: 730–731 (1971).
68. Airoldt, T., and Litsky, W. Factors contributing to the microbial contamination of cold-water humidifiers. Am. J. Med. Technol. 38: 491–495 (1972).
69. Hodges, G. R., Fink, J. N., and Schleuter, D. P. Hypersensitivity pneumonitis caused by a contaminated cool-mist vaporizer. Ann. Intern. Med. 80: 501–504 (1974).
70. Cartwright, R. Y., and Hargreave, P. R. Pseudomonas in ventilators. Lancet i: 40 (1970).
71. Covelli, H. D., Kleeman, J., Martin, J. E., Landau, W. L., and Hughes, R. L. Bacterial emission from both vapor and aerosol humidifiers. Am. Rev. Resp. Dis. 108: 698–701 (1973).
72. Edwards, J. H., Griffith, A. J., and Mullins, J. Protozoa as sources of antigens in "Humidifier Fever." Nature 206: 438–439 (1980).
73. MRC Symposium. Humidifier fever. Thorax 32: 653–663 (1977).
74. Zuravleff, J. J., Yu, V. L., Shonnard, J. W., Rihs, J. D., and Best, M. *Legionella pneumophila* contamination of a hospital humidifier. Am. Rev. Resp. Dis. 128: 657–661 (1983).
75. Burge, H. A., Solomon, W. R., and Boise, J. R. Microbial prevalence in domestic humidifiers. Appl. Environ. Microbiol. 39: 840–844 (1980).
76. Marinkovich, V. A., and Hill, A. Hypersensitivity alveolitis. J. Am. Med. Assoc. 231: 944–947 (1975).
77. Ashton, I., Axford, A. T., Bevan, C., and Cotes, J. E. Lung function of office workers exposed to humidifier fever antigen. Brit. J. Ind. Med. 38: 34–37 (1981).
78. Ganier, M., Lieberman, P., Fink, J., and Lockwood, D. G. Hu-

midifier lung, an outbreak in office workers. Chest 77: 183–187 (1980).
79. Friend, J., Gaddie, J., Palmer, K., Pickering, C., and Pepys, P. Extensic allergic alveolitis and contaminated cooling water in a factory machine. Lancet i: 297–300 (1977).
80. Rylander, R., and Haglind, P. Airborne endotoxins and humidifier disease. Clin. Allergy 14: 109–112 (1984).
81. Fink, J. N., Banaszak, E. F., Barboriak, J. J., Hensley, G. T., Kurup, V. P., Scanlon, G., Schlueter, B. P., Sosman, A. J., Thiede, W. H., and Unger, G. F. Interstitial lung disease due to contamination of forced air systems. Ann. Intern. Med. 84: 406–413 (1976).
82. Kohler, P. F., Gross, G., Salvaggio, J., and Hawkins, J. Humidifier lung: hypersensitivity pneumonitis related to thermotolerant bacterial aerosols. Chest (Suppl.). 69: 294–296 (1976).
83. Miller, M. M., Patterson, R., Fink, J. N., and Roberts, M. Chronic hypersensitivity lung disease with recurrent episodes of hypersensitivity pneumonitis due to a contaminated central humidifier. Clin. Allergy. 6: 451–462 (1976).
84. Patterson, R., Fink, J. N., Miles, W. B., Basich, J. E., Schleuter, D. B., Tinkleman, D. G., and Roberts, M. Hypersensitivity lung disease presumptively due to Cephalosporium in homes contaminated by sewage flooding or by humidifier water. J. Allergy Clin. Immunol. 68: 128–132 (1981).
85. Sweet, L. C., Anderson, J. A., Callies, Q. C., and Coates, O. Hypersensitivity pneumonitis related to a home furnace humidifier. J. Allergy Clin. Immunol. 48: 171–178 (1971).
86. Tourville, D. R., Weiss, W. I., Wertlake, P. T., and Leudemann, G. M. Hypersensitivity pneumonitis due to contamination of home humidifier. J. Allergy Clin. Immunol. 49: 245–251 (1972).
87. Van Assendelft, G., Forsen, K. O., Keskinen, H., and Alanko, K. Humidifier-associated extrinsic allergic alveolitis. Scand. J. Work Environ. Health 5: 35–41 (1979).
88. Gupta, K. C., Ulsamer, A. G., and Preuss, P. W. Formaldehyde in indoor air: sources and toxicity. Environ. Int. 8: 349–358 (1982).
89. Andersen, I., Lundqvist, G. R., and Molhave, L. The effect of air humidity and sulphur dioxide on formaldehyde emissions from a construction material (chipboard). Holzforsch. Holzeerwert. 28: 120–121 (1976).
90. IEC Beak Consultants Ltd. Indoor Air Quality, Cambridge Sealed Homes, a report for Ontario Ministry of Municipal Affairs and Housing, IEC Beak, Mississauga, Ontario, October, 1983.
91. Sheppard, D., Wong, W. S., and Uehora, C. F. Lower threshold and greater bronchomotor responsiveness of asthmatic subjects to sulfur dioxide. Am. Rev. Resp. Dis. 122: 873–878 (1981).
92. Alaire, Y., Ulrich, C. E., and Busey, W. M. Long-term continuous exposures to SO_2 in cynomolgus monkey. Arch. Environ. Health 24: 115–127 (1972).
93. US Environmental Protection Agency. Air Quality Criteria for Oxides of Nitrogen. Environmental Criteria and Assessment Office, Research Triangle Park, NC, 1982.
94. Mueller, F., Loeb, L., and Maper, W. H. Decomposition rates of ozone in living areas. Environ. Sci. Technol. 7: 342 (1973).
95. Farrell, B. P., Kerr, H. D., and Kulle, T. J. Adaptation in human subjects to the effects of inhaled ozone after repeated exposure. Am. Rev. Resp. Dis. 119: 725–730 (1979).
96. Rycroft, R. J. G., and Smith, W. D. L. Low humidity occupational dermatoses. Contact Dermatitis 6: 488–492 (1980).
97. Calnan, C. D. Cyanoacrylate dermatitis. Contact Dermatitis 5: 165–167 (1979).
98. White, I. R., and Rycroft, R. J. G. Low humidity occupational dermatosis—an epidemic. Contact Dermatitis 8: 287–290 (1982).
99. Achenbach, P. R. Use of ventilation for moisture control. ASTM Standardization News, November 1984, pp. 32–34.

Mold in Schools: a health alert

Last December, USA WEEKEND reported on a Texas family driven from their new home by mold. The story drew an unusually large response from readers, government officials and other media. The federal government requested reprints for flood victims, and CBS' "48 Hours" reported on the same family after our story. This week, we look at the emerging problem of mold in schools.

By Arnold Mann

It seemed like a harmless enough idea, and a good project for Mrs. Roueche's environmental science class in Greenville, S.C.: scrape mold samples from the ceiling tiles at Eastside High and send them off to be analyzed.

Roueche knew about molds and how they can make kids sick. Her own children, who attended Buena Vista Elementary just down the road, had been sick for years. First came the nosebleeds, then the headaches, chronic sinus infections and coughing. Nobody suspected the cause might be mold growing in the school building until *The Greenville News* reported that the highly toxic mold *Stachybotrys* had been found at Buena Vista. Angry parents started pulling their kids out of school. By the time it was over, the county had spent $1.9 million removing mold from the school, with kids herded into temporary classrooms while men in protective clothing suitable for contact with toxic materials cut out every bit of mold-infested ceiling tile, wallboard and timber and hauled it off for burial as toxic waste (the only safe way to get rid of *Stachybotrys*).

Dec. 3-5: Our first report, focusing on mold at home.

The lab results came back on the samples from Eastside High in January 1999: *Stachybotrys*, just like Buena Vista. "We really didn't expect to find what we did," Roueche says.

Now, after months of cleanup, many Eastside students are as sick as — or sicker than — the kids at Buena Vista. Three Eastside students have been placed on home study by their doctors for health reasons in the past year. David Vass, 15, has had headaches, congestion, ear infections and shortness of breath since he came to Eastside last August. Ashley Reece, 18, says she coughs for weeks and loses her voice. "Just when I'm starting to get it back," she says, "it starts again." Jon Buchanan, 18, has spontaneous nosebleeds. Alicia Moose, 16, has been hospitalized twice for headaches, partly because of mold, and had to be homeschooled for two months last fall. Memory problems also are common. Missy Minock, 18, says she can recall every class and teacher she's had from kindergarten on, "but I can't remember the classes I had last semester."

• • •

Mold in schools is on the rise and making children sick. According to a Government Accounting Office report, 20% of the USA's 80,000 public schools have indoor air quality problems. "I'm inundated with schools," says Richard Shaughnessy, program manager of Indoor Air Research at the University of Tulsa and an instructor in the U.S. Environmental Protection Agency's Tools for Schools indoor air quality training program. Shaughnessy travels around the country teaching districts how to keep their schools free of indoor contaminants. (EPA chief Carol Browner says the agency "has been committed to providing school administrators with simple, low-cost methods that improve air quality and have a significant impact on children's health.")

Microbiological contaminants — particularly molds — account for half of indoor air health complaints, says Marilyn Black, chief scientist at Atlanta-based Air Quality Sciences, a leading indoor air quality testing firm. That means as many as 7,500 public schools

Cover and cover story photo illustrations by Robert Corwin & Troy Evans, Alter Image, for USA WEEKEND

have indoor air problems related to mold. Mold can start growing any time water leaks, Black says, and schools, many of which have flat roofs that collect water, are "notorious" for leaks.

Chronic leaks can turn ceiling tiles, wallboard or wood into ready-to-eat mold food. Common molds like *Cladosporium* and *Penicillium* can grow to toxic levels, triggering allergic reactions, including asthma, as well as sinus infections, headaches, coughing, and eye and throat irritation. Others, like *Stachybotrys*, *Memnoniella* and *Aspergillus versicolor*, produce airborne toxins, called mycotoxins, which can cause even more serious problems, including chronic fatigue, loss of balance and memory, irritability, and difficulty speaking.

Children are more susceptible to mold-related illness than adults, because their lungs and other organs are still developing, says Ruth Etzel, M.D., former chairwoman of the Committee on Environmental Health of the American Academy of Pediatrics. "Pediatricians used to consider molds a nuisance," Etzel says, "but in the last five years we've come to consider them an actual health hazard." Mold-related respiratory problems often go undiagnosed among kids, she says, because "most pediatricians don't think about molds when they see a child with respiratory problems."

The mere presence of mold, even *Stachybotrys*, does not necessarily mean symptoms of respiratory illness are caused by that mold, cautions Claudia Miller, M.D., an environmental health expert at the University of Texas Health Science Center at San Antonio. Other factors, including volatile organic compounds and a lack of fresh air, can cause similar symptoms. But she says no amount of visible mold is appropriate at school.

When mold is cleaned up, the sick usually get better, but these cleanups are budget breakers. In 1998, California's Sacramento School District borrowed $5 million to put new roofs on its high schools, where garbage cans had doubled as water collectors. In February, Hill Elementary School in Austin, Texas, evacuated all 777 pupils when large amounts of *Stachybotrys* and *Penicillium* due to roof leaks were found. Several teachers and kids needed medical care. This school year, pupils and staff will remain at an alternate site while Hill is gutted and renovated. El Paso has spent $4.2 million for mold-related renovations of 14 schools, says Ed Sevcik, former director of facilities for the school district. "We're moving as fast as we can," he says. "I don't think El Paso is any different from any other district facing this problem. The funds just aren't there."

• • •

Beth Roueche's environmental science class had a clear plan. The kids mapped out all visible mold in the building and selected five test sites, then Roueche scraped mold samples from water-stained ceiling tiles into plastic bags and sent them off to Mycological Testing Service, an independent mold-testing company in New Jersey. What came back shocked everyone: Two of the five samples — from the library and the hallway — contained *Stachybotrys*. *Penicillium*, *Cladosporium* and *Aspergillus* also were present in some samples.

The school district took its own air samples and assured everyone that the *Stachybotrys* was not airborne and therefore not a threat. Roueche counters

Continued on next page

Stachybotrys *(stack-ee-BOT-ris)* **is part of a family of molds that produce airborne toxins that can cause breathing difficulties, dizziness, memory and hearing loss, and flulike symptoms.**

Telltale signs of mold at home or school

- **Moist carpeting or stained ceiling tiles,** indicating unattended leaks.
- **Musty odors.** These often signal mold growth.
- **Obvious cosmetic fixes.** Replacing ceilin tiles or painting stained wallboards can disguise an underlying moisture proble such as a leaky roof.
- **High humidity.** Keep a temperature-humidity gauge in the classroom or your living room. Relative humidity should be consistently below 60%.
- **Heat or air conditioning being shut down** for long periods (summer vacation, for example), especially in hot or humid areas.
- **Cabinets, blackboards or large furniture positioned against outside walls** in hot, humid climates. This can impede air fl and drying, and promote condensation between these objects and the cool outside wall.
- **Lots of plants.** Indoor plants are just another source of moisture that can ra humidity and contribute to mold growt

— A

- **ONLINE at usaweekend.com,** you'll find mo information, including Arnold Mann's 10 Thin You Must Know About Mold, as well as the magazine's December cover story about the dangers of mold in your house. You'll also fin links to the Environmental Protection Agency and the Healthy Schools Network.
- **ONLINE at hgtv.com,** mold experts will answer your questions this Sunday in a live interactiv chat co-hosted by HGTV and USA WEEKEND, 8-9 p.m. ET. The experts include a pediatrician an environmental lawyer and an indoor air quality specialist who's also an instructor for the EPA's Tools for Schools program.
- **CALL** the American Lung Association to find o how to spot and treat mold-related respirator problems: 1-800-LUNG USA (586-4872).

109 Wappoo Creek Drive, Suite 4B Charleston, SC 29412 ph: 843.795.9965 fax: 843.795.9757
www.carolinaheatpipe.com

Mold in Schools: A health alert

Continued from previous page

that "*Stachy*" spores are sticky and rarely show up in air samples. "They said we only found mold in five ceiling tiles, but I explained we only *tested* five."

Roueche says kids and teachers started getting sicker during cleanup, when workers without protective clothing started tearing out mold-infested ceiling tiles and throwing them on classroom floors, with students present. Oby Lyles, executive communications director for the Greenville County school district, confirms that workers collected and removed hundreds of ceiling tiles but says all the work was done after school hours.

Using the EPA's Indoor Air Quality Tools for Schools Kit, Roueche's class began conducting teacher surveys and monitoring rooms for temperature and humidity. Today, her classroom is full of charts documenting "hot spots."

"I won't sit back and watch this stuff cook me and my kids," teacher Sammie Liberatore said before leaving Eastside for another job. "Something's got to be done. A learning environment is one thing; a dangerous one is quite another."

Roof repairs are "ongoing" at Eastside, says communications director Lyles, with moldy ceiling tiles being replaced as needed. The roof is now being replaced, he says, and the district's custodial staff, servicing nearly 100 schools and 60,000 students, has had mold training. "Once we encountered the problems with Buena Vista," Lyles says, "it raised everyone's awareness about the danger of mold."

"I'm inundated with schools," says Richard Shaughnessy, a Tulsa air q expert who travels the country to school districts how to avoid conta such as mold. He's among the exp participating in Sunday's chat at h co-hosted by HGTV and USA WEEK

Teachers filed no mold-related workman's compensation claims last school year, he says, though there have been health complaints from 27 students in the past two years.

Roueche's health surveys show higher numbers. In January, 160 out of 236 students surveyed said they were having health problems, along with 37 out of 69 teachers, 10 of whom were having nosebleeds.

"It would have been easier and cheaper to tear down the school and build a new one," says state Rep. Bob Leach, of South Carolina's 21st District. He says construction of an entirely new school has been pushed up from 2008 to 2003.

But in the meantime, Roueche wonders, what will become of the Eastside kids — especially her own daughter, Kimberly, now a sophomore there? Kimberly's old symptoms from Buena Vista came back during her freshman year. "She's had a lot of problems," Roueche says. "She's had chest pains they think are related to her pulmonary system."

One night, not too long ago, student Billy Siverling stood before the county school board and spoke for all the Eastside students. "We have a great student body and faculty," he said. "We love Eastside High. But what price can you put on good health? And how can you raise scores if the very building is making us sick?"

ARNOLD MANN, *a contributing writer for* Time *magazine, also wrote USA WEEKEND's original cover story on mold.*

DOING BUSINESS

The Law & You

Mold: a fungus among us

To reduce liability, seek red flags, then defer to experts.

BY ROBERT BRAND

Unquestionably, the disclosure du jour in residential real estate is mold.

Toxic mold, as it's been called, is an increasingly important issue for real estate professionals. There are several reasons:

- Modern energy-efficient building practices provide a conducive environment for mold growth.
- Public awareness on the topic has grown.
- Litigation activity has increased after several recent multimillion-dollar judgments.

Recently, for example, a Texas court awarded a family $32 million from their insurance company for alleged mold exposure. The verdict included payments for property damage, mental anguish, punitive damages, and legal fees.

With judgments like that, you can be sure mold lawsuits are here to stay.

At the outset, you should understand three key points about mold liability:

1. As a real estate professional, you don't need to become an expert on mold.
2. Large legal settlements don't change what you're responsible for disclosing.
3. Some basic and simple strategies can equip you to address this important issue.

Mold, a fungus, is ubiquitous, found everywhere indoors and out. It appears as a woolly growth on damp or decaying organic material. Most of it is harmless. But some varieties, such as the aspergillus and stachybotrus strains, are known to produce potent toxins under certain circumstances.

Mold needs two conditions to thrive: moisture, often resulting from leaky roofs, defective plumbing, drainage problems, and high-humidity rooms (such as laundry rooms); and a food source, such as certain types of insulation, wood, and carpeting.

Many times, mold is easily eliminated by removing the water source or applying common housekeeping practices, such as thorough cleaning with bleach. However, when the mold is concealed and conditions are favorable, it can take hold and release a steady stream of spores into the air, which people then breathe in.

Those who suffer from mold exposure complain most often of respiratory problems, skin irritation, and nervous system disorders. There is much disagreement in the medical community about the precise correlation between mold and health problems, but mold is a serious enough threat that it has its own page on the EPA website (go to *http://www.epa.gov/iaq* and click on Mold Resources).

Because major mold problems often start with slight indicators, you should be alert to red flags when conducting your visual inspections. The most common telltale signs are staining on walls and ceilings and a musty, mildewy odor. Discoloration can range from common water stains to the multicolored variety.

So what do you do when you detect a red flag or find out that red flags have been detected by a home inspector, a pest control company, or a prospective buyer? Federal and state protocols on mold exposure in residential structures range from minimal to nonexistent. In May the California Senate approved the country's first mold bill, which sets standards for acceptable indoor levels and requires homesellers to disclose

mold problems.

Because there are no standard practices yet, buyers often look to third parties in the transaction for toxic mold remediation. Real estate practitioners should be aware that home inspectors and pest control operators are rapidly adding disclaimer language to their reports to control their liability, and homeowners insurance coverage limitations are commonplace. Real estate companies should prepare for the possibility of being held liable for mold problems by buyer clients.

To reduce liability, consider the following points:

- During your visual inspections, pay specific attention to stains or discoloration on ceilings and walls, including the baseboard area, to pick up red flags associated with plumbing leaks and drainage problems.
- Pay attention to mold or mildew odors.
- If you notice any of these signs of potential mold problems, carefully word a written disclosure. Be sure not to offer expert analysis, avoiding terms such as "black mold" or "toxic mold." Generic descriptions such as "mold type" or "mildew-like" might be used. Here's an example: "Some staining observed on north wall of downstairs bedroom. Mildew-like odors also noted in master bedroom closet. Contact a qualified specialist for review."
- Insist that potential buyers have their own, independent home inspections conducted.
- Become aware of the licensed experts in your area who are prepared to inspect for mold, and know when to advise (in writing) that potential buyers hire one of those experts. Some home inspectors are beginning to provide specific mold detection and diagnostic services. If necessary, recommend that your buyer clients retain a Certified Industrial Hygienist (CIH) or other environmental specialist to provide mold detection and lab analysis services.
- As always, avoid recommending a particular vendor; instead, give buyers a list of vendors or simply direct them to the type of service they need and let them choose one themselves.
- Consult a lawyer to determine whether a special mold disclosure disclaimer form should be developed and signed by the transaction principals.

Equipped with basic knowledge, and using some simple litigation prevention strategies, you'll be better prepared to address this disclosure challenge effectively.

realtormag.com
YOUR BUSINESS SUPPORT TOOL

To learn more about property disclosure, visit our Sales & Marketing Tool Kit at *www.realtormag.com*. Tool Kits are for registered users of *REALTOR.org* (formerly *onerealtorplace.com*). In addition, more mold resources are available at the NAR Virtual Library at *REALTOR.org*.

Brand is a licensed general contractor who works as a consultant on litigation avoidance strategies. He can be reached at 760/752-7754 or www.disclosureinfo.com.

109 Wappoo Creek Drive, Suite 4B Charleston, SC 29412 ph: 843.795.9965 fax: 843.795.9757
www.carolinaheatpipe.com

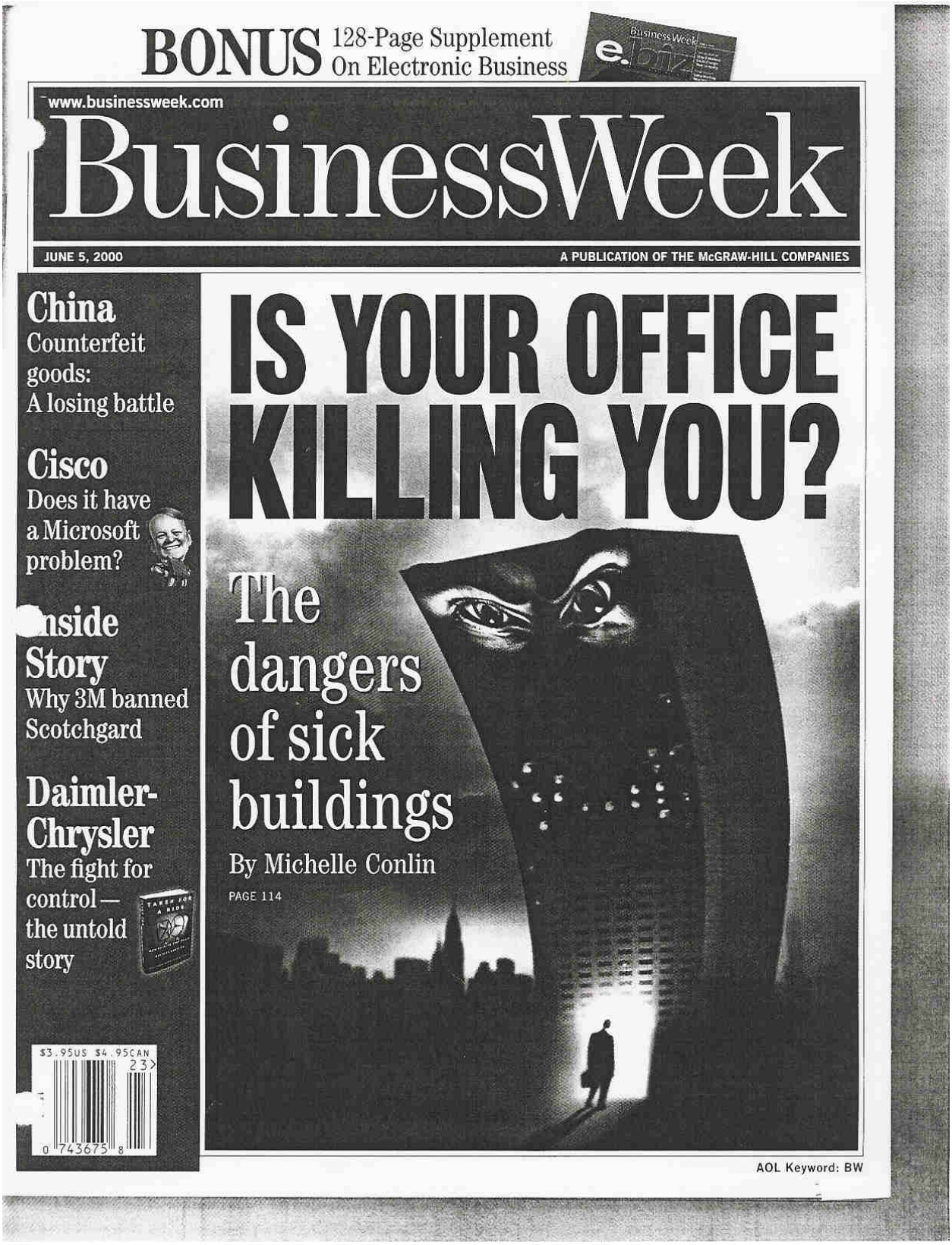

BONUS 128-Page Supplement On Electronic Business

www.businessweek.com

BusinessWeek

JUNE 5, 2000

A PUBLICATION OF THE McGRAW-HILL COMPANIES

China
Counterfeit goods: A losing battle

Cisco
Does it have a Microsoft problem?

Inside Story
Why 3M banned Scotchgard

DaimlerChrysler
The fight for control — the untold story

$3.95US $4.95CAN

IS YOUR OFFICE KILLING YOU?

The dangers of sick buildings

By Michelle Conlin

PAGE 114

AOL Keyword: BW

COVER STORY

Is Your Office Killing You?

Sick buildings are seething with molds, monoxide--and worse

Everything was running perfectly that spring afternoon at the courtyard-style Best Western Springdale in the suburbs of Cincinnati. Room service was humming along at a reliable clip. The floral-patterned comforters were getting fluffed. Kids were splashing in the pool. Then, suddenly, General Manager Jim Crane got an emergency call about a leak that was turning Room 529 into a virtual waterfall. Within minutes, he and the hotel's burly engineer were ripping apart the room's walls. Inside, they found something out of a B-grade horror movie: a deathly smelling mold so gooey and hairy it seemed like it was breathing.

Crane soon discovered that, like the Blob, the Aspergillus strain of mold was everywhere: swarming through bathrooms, sprouting out of ceilings, and creeping through the ventilation and vending machine areas. This was May, 1998, and for the next year Crane worked to rid the hotel of the mounds of black growth. He knew they were a disaster for guest relations, but what he didn't realize was that each time he took a breath, he was inhaling the mold's toxic fungal spores. These bioaerosols landed on the delicate mucous membranes of his airways and lungs, causing chronic inflammation and eventually leading to a medical diagnosis of hypersensitivity pneumonitis. The condition further scarred his lungs and eventually progressed into pulmonary fibrosis, a disease that is painful, debilitating, and sometimes even fatal. Slowly and invisibly, his workplace was killing him.

Today, Crane wheezes on his living room sofa--paying bills with his retirement savings and taking 17 different drugs each day. He filed a lawsuit in January against the hotel's owners, Laks Enterprises, which wouldn't comment on the suit. They lost the hotel through foreclosure to Bank of America in September after spending more than $2 million on an exhaustive remediation, and "the hotel is now safe," says the hotel's director of sales, Karen Sullivan. Already, though, Crane has lost half of his lung capacity. Says Crane's

RELATED ITEMS
Is Your Office Killing You?

COVER IMAGE: Is Your Office Killing You?

TABLE: Diagnosing a Sick Office

ILLUSTRATION: Do You Work in a Toxin Factory? (.pdf)

Why the Air and Light Are So Much Better in Paris

Commentary: It Pays to Tell the Truth

INTERACT
E-Mail to Business Week Online

M-O-L-D — Another BAD Four Letter Word

By Wallace S. Gibson, CPM, PPM

- *Ron and Melinda Allison moved their family from New York City to Austin, TX. to escape the big city. Their 22-room mansion on 72 acres was their "dream home." The couple's 4-year-old son Reese was the first to become ill. He started coughing up blood, his equilibrium was completely shot, and he experienced very bad stomach problems — diarrhea and vomiting. Then Ron became sick — having trouble breathing, coughing up blood. Melinda had trouble staying on her feet. Reese developed asthma and had trouble in school. Ron went back to New York with Reese to see a doctor specializing in the treatment of mold exposure illnesses. Dr. E. Johanning of Albany, NY, found that both Reese and his father had low levels of antibodies that suggested exposure to a toxin. Dr. Johanning indicated that Reese's lungs had been scarred and that Ron had brain damage.*
- *Ed and Nancy Ajlouny's house flooded in 1999 after Detroit experienced a blizzard. Their son's nose began to bleed; their tempers shortened; their memories failed; their heads ached. Nancy was diagnosed with interstitial lung disease a year later. They packed a few bags and left the house filled with black mold — a mold they believe has ruined their lives.*
- *Julie and Richard Licon of Southern California found Stachybotrys (mold) in the walls and floors of their condominium. "All the wood was pretty much black from the mold," says Richard. The homeowners association agreed to move the Licons and their six children to a hotel while their house was cleaned of mold. Seven months later, the Licons moved back into their condo but became convinced that the mold was still present in their home. During their seven-month stay in the hotel, their children were not sick; however, when they moved back into their home, the kids got sick again. Their 2-year old son, Jordan, had seizures from mold exposure and these resumed when they moved back home, the Licons say. Their other children also experienced a variety of symptoms, from nosebleeds to headaches and dizziness. Their house was retested and massive amounts of Stachybotrys were still in the household air. A spore had grown inside their air-conditioning unit. The Licons moved out again — taking, literally, the clothes on their backs.*

In some cases, Stachybotrys may even kill. In Cleveland, Rico Thornton almost died from his mold exposure. He had pulmonary hemorrhaging — also known as bleeding lung syndrome — an extremely rare condition.

Dr. Dorr Dearborn of Rainbow Children's Hospital in Cleveland has studied pulmonary hemorrhaging in infants and suggests that mold is not only dangerous, but deadly... "Of the 29 cases (of pulmonary hemorrhaging in infants) that we've studied in depth, we've had 5 deaths. And all 5 of those have come from homes that were contaminated with Stachybotrys."

The Stachybotrys mold was virtually unheard of in Metro Detroit several years ago, and it was only after modest media attention that one local air-testing company said it had found the mold in more than 150 homes in Wayne, Oakland, and Macomb counties. This mold has caused families to abandon their homes, fueled contentious legal battles with insurance carriers, and bankrupted families.

Insurance companies are reluctant to pay mold damage claims because scientific proof of cause-and-effect eludes researchers; however, experts and doctors from across the country agree that anecdotal evidence of mold-related health risks calls for a better-safe-than-sorry approach, especially when it comes to Stachybotrys.

Stachybotros mold spores are found in nature and can grow anywhere cellulose-rich materials like wood or plaster remain moist. It can grow behind walls from the basement to the attic. This mold poses a greater danger than common refrigerator mold because it sprays the air with invisible poisons called mycotoxins. Research on this mold has fingered it as a cause of many unexplained infant deaths.

IN SOME CASES, STACHYBOTRYS (MOLD) MAY EVEN KILL.

Dearborn points out... "thirty years ago, the U.S. Surgeon General told us we'd get cancer from smoking. But it wasn't until very recently that we were able to establish a cause-and-effect with absolute medical certainty."

A Texas State professor, author of a 1998 study that shows a strong correlation between Stachybotrys and public buildings that appear to make people sick, indicates that... "if you're working with this stuff, you've got to wear a moon suit and a respirator. If you get this stuff on your skin, it's going to cause sores and rashes, and if you inhale it, it's going to cause serious health problems."

The primary source of moisture-related problems in the home is usually in the building "envelope" — in the walls, roof and foundation. Deterioration of sealing materials such as grout and caulking may increase moisture levels and poor ventilation in areas of the home where indoor moisture levels are high is another factor.

Tips for healthier indoor air include

- Reduce the moisture level of indoor air to prevent flare-ups of allergies and the breathing problems associated with asthma. Moisture encourages the infestation of house dust mites and the growth of fungi — both common triggers of asthma and allergies.
- Reduce humidity by using central air conditioning. Avoid evaporative coolers (swamp coolers) and humidifiers.
- Remove carpets from the rooms of asthmatic or allergic children.
- Cover mattresses and box springs with mite-proof cases to reduce dust mite exposure.
- Wash pillows and bedding in water 130 degrees Fahrenheit, preferably weekly. Wash blankets monthly.
- Avoid keeping warm-blooded pets in the home, including dogs, cats, and small animals, such as guinea pigs and birds, especially if they trigger asthma or allergy symptoms. If pets must be kept, bathe them weekly and keep them out of the bedrooms of asthmatic or allergic people.
- Control cockroach infestations.
- Reduce indoor mold. Clean bathrooms, kitchens, and basements regularly to eliminate indoor molds resulting from high humidity
- Protect children from tobacco smoke — a potent asthma and allergy trigger.

continued on page 8